Al Furat Journal of Innovations in Engineering Applications (AJIEA)
ISSN - 3105-3149

Locating ONU Serving Units in Fiber Wireless Access Network (FiWi) By Using AOA Optimization Algorithms

Ammar A. Abbas [1]

[1] Babylon Technical Institute, Al-Furat Al-Awsat Technical University, Babylon 51001, Iraq
ammar.abbas@atu.edu.iq
https://doi.org/10.46649/ajiea.v1.2.3a.30.12.2025

Abstract : Combining an optical network with a wireless access network is known as a fiber wireless access network (FiWi). Combining the advantages of wireless and optical domains, this hybrid multi-domain network meets the simultaneous needs of customers for high capacity and data transmission speed. FiWi is self-organizing and exhibits the characteristics of reliability, durability, flexibility, and cost-effectiveness. It is difficult to install an optical network unit (ONU) in these networks. ONU deployment in FiWi facilitates network design simplification and improves performance in terms of cost-effectiveness and throughput. In this thesis, we employed the arithmetic optimization method (AOA) to determine the optimal locations for ONUs in the FiWi network. The optimal location of ONUs has two objective functions: the highest coverage for users and the lowest overlap among ONUs. According to the simulation results of the proposed method, it has a better execution time and cost improvement than other compared algorithms.

Keywords: *fiber-wireless access network; optical network unit; Arithmetic algorithm; Optimal location.*

1. INTRODUCTION

Considering that modern life is dependent on digital technology, Internet technologies are essential. It includes practically all operations performed by humans, such as accessing bank accounts, using YouTube, Facebook, and Google services, online shopping, and making video calls [1]. The Internet Information and Communication Technology (ICT) also has a significant impact on the economy of society. Internet technologies are rapidly demanded by subscribers worldwide, and they demand a good Internet line service that offers more bandwidth and higher reliability [2]. Compared to DSL and Wi-Fi, they offer faster speeds and a more reliable connection. Optical fiber can provide high capacity with maximum bandwidth and low attenuation in these conditions. Due to the fact that fiber optic cables are based on light-based technology that converts data into light, data transmission at the speed of light is the fastest medium known to mankind. And as a result, a lot of bandwidth is created to connect with super-speed services. Speeds. Since electromagnetic interference cannot damage the light, this technique is reliable because it has the lowest possible noise level that might disturb the transmission.

The most promising technology for providing high bandwidth with better reliability and very high quality of service (QoS) than older, more standard Internet connection technologies, such as DSL, is fiber to the home. This system relies on optical technology that connects Internet services to paying customers through

ATU- AJIEA, Volume: 1, Issue: 2, 12, 30, 2025, © 2025 AJIEA, All Rights Reserved

optical fiber. A number of different models are included in the access architecture known as FTTH. In addition, FTTH is a highly adaptable technology that can be used in any country; however, there are significant variations in national laws, and the geographical location of the end user is completely independent [1].

Due to the variety of locations that FTTH supports, network infrastructure designs may vary by location and region. While friends and family explore different ways to learn, work, play, and improve their quality of life, individuals may be evaluating the benefits of adopting FTTH. The high bandwidth required to support all services and applications can only be managed by fiber-based networks [1]. In this study, we will use the computational optimization technique to optimally locate a number of ONUs in a wireless fiber access network (FiWi).

2. Statement of the Problem

The most efficient communication method is fiber to the home technology, or FTTH. With this service, optical fiber is used to transmit data instead of copper wire to the customer's home or other location. Customers may receive a range of services, including faster and better quality telephone, Internet, multimedia, and data services. FTTH band connections refer to fiber optic cable connections for specific locations. Although these fiber-optic technologies can transfer large amounts of data much faster than copper lines, they cost about the same as cables. One of the critical elements in using the aforementioned networks is the ONU (Optical Network Unit). Because it utilizes resources efficiently and simultaneously reduces costs. ONU converts optical signals into electrical impulses through a fiber connection. Different types of customer data may be organized and optimized using an ONU [3].

One of the factors driving the development of optical technologies is the increasing demand for more capacity and relatively new services, creating a significant opportunity for telecommunications companies and network operators. Optical fiber has undergone major changes and improvements since entering the field of communication and information technology. Waveguides are used in optical networks to provide connectivity between subscribers and the core network. In order for them to have access to information and data, the transmission media must be added to the home or work sharing option. Depending on the type and processing capacity of shared information, this may not be the best option.

Fiber to the home is a brand-new and rapidly growing way to deliver broadband speeds to customers. High-speed Internet connections can be provided to residences, offices, communities, or parks through these methods.

The integrated FiWi architecture is shown in Fig. (1). The FiWi network consists of XG-PON as the backend network and based WLAN network at the frontend. The XG-PON consists of an OLT located at the central office, which is connected to multiple optical network units (ONUs) through a passive splitter. Since the splitter in the network is a passive component, hence, these networks are known as PONs. The function of the passive splitter is to combine the end-users to the OLT by distributing the signal from the OLT to the user and vice versa. Further, OLT is connected to an internet server via a point-to-point Ethernet link. ONUs receive packets of different traffic types and queue them in T-CONTs maintained by each such ONU [4].

ATU- AJIEA, Volume: 1, Issue: 2, 12, 30, 2025, © 2025 AJIEA, All Rights Reserved

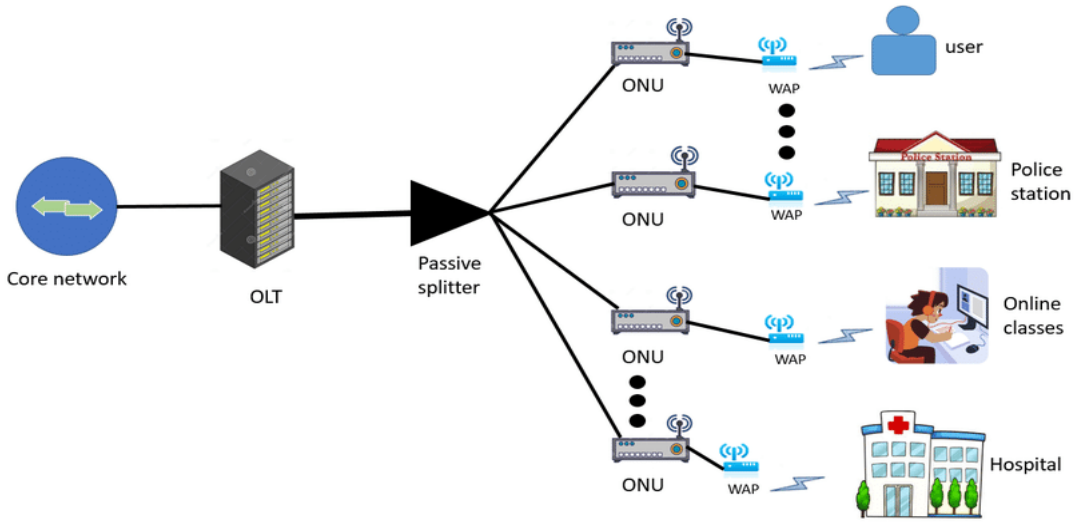

Figure (1) : fiwi architecture

Over the past two decades, fiber optic cables have become a serious competitor for traditional and modern communication systems. In the coming years, this trend will be maintained by the potential of optical fiber technology to transmit data with high capacity and minimum transmitter power. The optical fiber distribution system will occupy more area in the next telecommunication network with the development of technology over time [5].

3. Significance of the Research

Data usage is increasing in various fields, most notably communications in all its aspects. The quality of communications is measured by the high speed of information transfer and the amount of data transmitted. To accelerate this process, additional technologies must be utilized. Thanks to their high capacity and speed, optical fiber meets today's needs . For fiber optic networks to achieve the required standard, network components, especially optical fiber service units (ONUs), must be properly distributed.

4. Research Objectives

Our goal in this work is to determine the locations of optical fiber service units (ONUs) in a wireless fiber optic network to provide maximum user coverage at the lowest cost, using machine learning methods. Therefore, in this work, we will use the AOA arithmetic optimizer algorithm to achieve maximum coverage in a wireless fiber optic network. Its equations and mathematical calculations will be implemented using MATLAB.

5. Basic Concepts

5.1. Introduction

An Optical fiber that acts as a bridge is a type of link that transmits the most data over long distances. 9.9 Gbps for STM-64 type and 2.4 Gbps for STM-16 type optical fiber information and data rates are considered. The rates shown are the threshold rates considered for the network.

As a result, optical fiber calculates the speed of data and information delivery based on the mentioned defaults. In other words, fiber optics can be ignored because it lags behind other developing technologies. Reliability factor may be considered while choosing the best and most comprehensive fiber optic. Thanks

ATU- AJIEA, Volume: 1, Issue: 2, 12, 30, 2025, © 2025 AJIEA, All Rights Reserved

to this feature, every packet sent to the fiber is received successfully. It's important to note that only a few apps can use it because wired connections prevent it from being used elsewhere.

In this section, we will discuss the basic concepts of fiber in the home.

5.2. Fiber Networks to X

PON technology, also known as fiber-to-x, has a variety of applications for providing broadband connectivity in access networks for households, multi-occupancy buildings, and small businesses. A set of technologies used to transmit digital signals using optical fiber as data transmission is included in the FTTX group. Depending on the proximity of the optical fiber to the end user, there are different levels of coverage that more or less reduce the cost of these systems. All FTTX networks are always accessible using active components based on the location of customers and end users [6]. They also provide conceptual star, bus and ring network designs. The following categories apply to FTTX networks [7]:

- FTTB (Fiber to the Building): Optical fiber is used to connect the buildings of an organization or business.
- FTTC (fiber to the curb): describes the sharing of fiber optic cables from central office equipment to a communications switch located within 300 meters of a home or building (curb), followed by a dedicated cable (wire pair coaxial cable) or another transmission device is connected from the curb side to the equipment inside the patient's building.
- FTTN (Fiber to the Node): A common fiber optic connection extends from the CO to the delivery perimeter, which is located 1000 meters away from the house and building (curb).

FTTH (Fiber to the Home): Fiber optic cable is installed from the central office to the residence, as shown in the following Figure (2). which explains all the different categories of FTTX network forms.

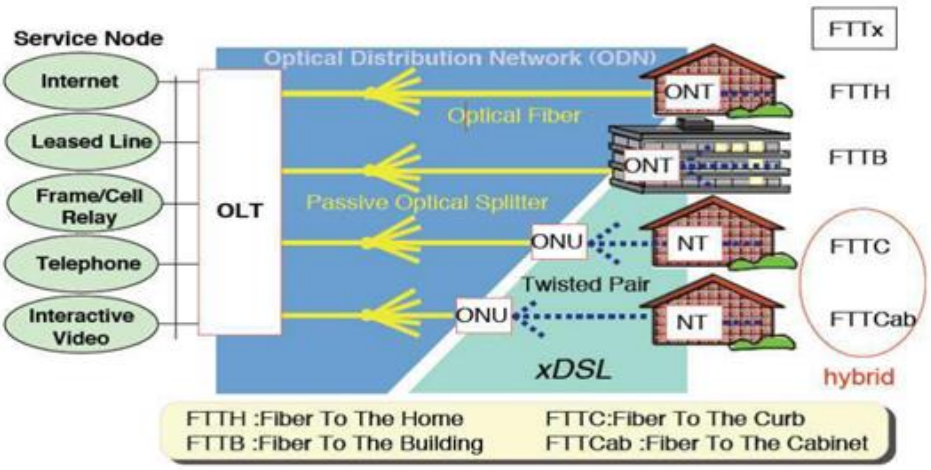

Figure (2) : Some FTTX scenarios [8].

5.3. Optical Communication System Components

The information transmitted through an optical communication system moves through optical fiber in the form of electrical pulses [4]. The elements of the optical fiber transmission system are as follows:

- Signal sources or transmitters
- Optical fiber

ATU- AJIEA, Volume: 1, Issue: 2, 12, 30, 2025, © 2025 AJIEA, All Rights Reserved

- Optical amplifiers three
- Optical receivers and detectors

Data sources deliver electrical signals digitally to an encoder in an optical communication system and are then encoded using industry-standard coding techniques. The information is then encoded before being transmitted to the laser source modulator and driver, where the light source is monitored and the electrical signals of the information are modulated onto the light waves. The electrical signal in the receiver part is increased if necessary to be used in the next parts at the destination, and the signals of the information source can be reconstructed and used there [5].

5.4. FTTH Networks

FTTH networks are a subset of the FTTx transmission technology family in the telecommunications industry. When it comes to bandwidth, these networks have the capacity to send huge amounts of data and data at very high speeds to a place close to the end user. Figure (3) shows how FTTH systems work for various types of uses inside homes.

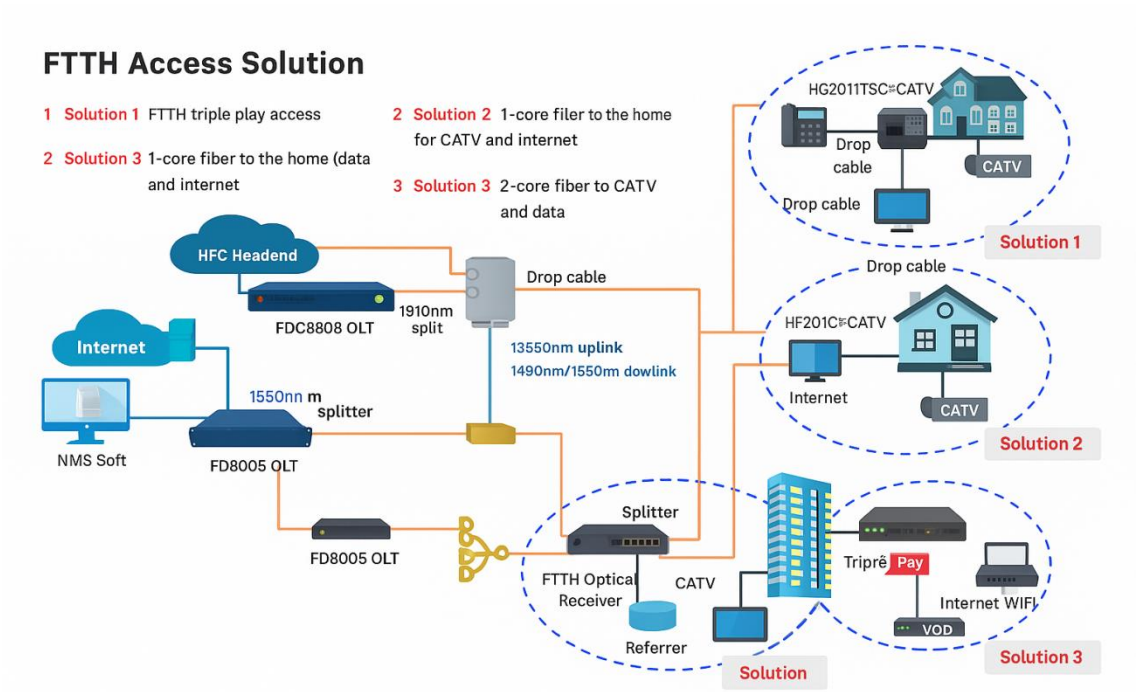

Figure (3) : FTTH solution [9]

The access network, commonly referred to as the "first mile network", connects regional businesses and customers with the central offices of service providers (COs). In the literature, this network is also known as a shared access system or local loop [9]. The need for bandwidth in the access system has increased significantly over the past few years. Mile-first access solutions with extensive throughput and media-rich services are in demand by local customers. Likewise, business users need broadband infrastructure to connect their local affiliates to the Internet backbone. Around 2030, bandwidth demand is expected to be at least 10 Gbps higher, which is what we notice in the graph of Figure (4).

ATU- AJIEA, Volume: 1, Issue: 2, 12, 30, 2025, © 2025 AJIEA, All Rights Reserved

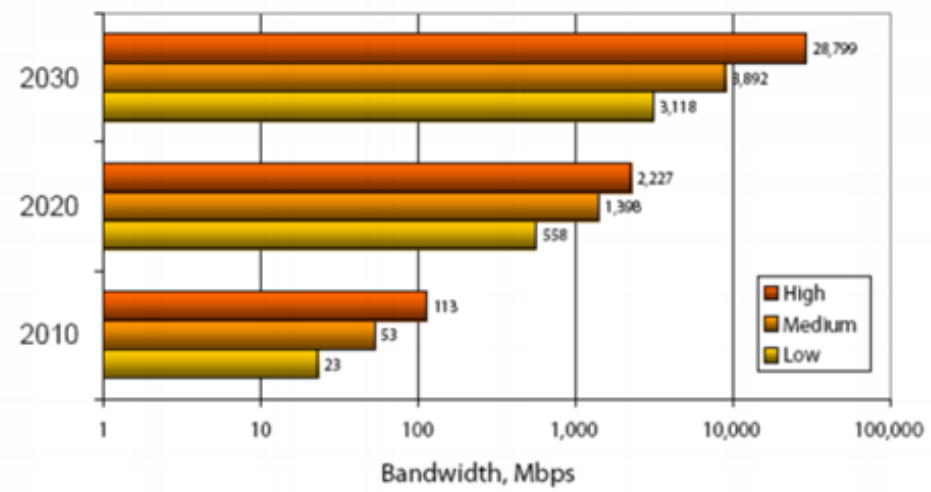

Figure (4) : Forecasts of bandwidth requirements in the future [13]

Digital Subscriber Line (DSL) based networks and Community Antenna Television (CATV) based networks are two examples of broadband access technologies available today. However, due to the fact that they are based on facilities that were first created for the transmission of audio and analog TV signals, but the final versions are not ideal for data, both of these systems have limitations. More recently, a combination of asymmetric DSL (ADSL) technologies has been used, offering up to 1.5 Mbps of input capacity and 128 kbps of output bandwidth. Additionally, due to signal distortion, the distance between any DSL user and the CO must be less than 18,000 feet. Despite the continued emergence of several types of DSL, such as very high bit rate DSL (VDSL), which may accommodate input bandwidths of up to 50 Mbps, these technologies have more severe distance limitations.

For example, VDSL can only support up to 1500 feet. By dedicating a portion of the radio wave (RF) channel for data, CATV networks provide Internet services. However, since CATV systems are primarily built to provide public broadcasting services, the two-way communication architecture used in data networks is not suitable for them. When there is a lot of traffic, poor network speed usually frustrates consumers. There is tremendous competition between different types of service providers due to the need for new generation broadband networks and triple distribution (voice, data, and video) for customers. These developments have forced service providers everywhere to shell out for FTTX (Fiber to X). Fiber to the node, fiber to the curb, fiber to the enterprise, fiber to the home, and fiber to the premises are just a few examples of optical access technologies that fall under the FTTX umbrella. FTTH may use one of these topologies, depending on the actual location of the field where the fiber is connected and the intermediate or cooper equipment. Based on the use of different technologies and protocols, several FTTH topologies may be produced. In fact, FTTH may be classified in several ways [10].

5.5. FTTH Architectures

It is undoubtedly very important to consider whether the FTTH architecture is suitable for adaptation when developing an FTTH network. Even if it has nothing to do with recent events, it is still very important. However, recent developments provide an excellent opportunity to evaluate and deploy optical solutions that are both commercially feasible and can meet future FTTH network needs.

Point-to-point (P2P) and point-to-multipoint (P2MP) schemes, which are further divided into active optical networks (AON) and optical transmission networks, are the two main FTTH (PON) topologies. Two

ATU- AJIEA, Volume: 1, Issue: 2, 12, 30, 2025, © 2025 AJIEA, All Rights Reserved

popular FTTH topologies for FTTH deployment are point-to-point (P2P) and point-to-multipoint (P2MP). The type of services offered, the cost of the infrastructure, the state of the existing infrastructure, and any future intentions to move to new technologies all play a role in determining point-to-point (P2P) versus point-to-multipoint (point-to-point) [8].

5.5.1. Point-to-point (P2P) Architectures

Ethernet Switching Optical Network (ESON) is the name of a P2P network (ESON). Creating point-to-point grid patterns is easy. Using the point-to-point (CO) architecture, there is an exclusive and direct connection between the user equipment (UE) and the central office. Users are often companies or other entities that have extensive data transfer requirements. When using point-to-point architecture, the consumer has to pay for additional bandwidth. A point-to-point connection between an optical user unit (ONU) and an optical line terminal (OLT) is just what the name suggests (so it's often called fiber to the home).

In the point-to-point configuration shown in Figure 5, the ONU is connected to a separate fiber pair routed from the OLT. In addition to disadvantages, point-to-point design also has various advantages. When using different fiber pairs, customer service possibilities are more diverse. However, there are several problems with point-to-point design. The number of ONUs determines the amount of HUB equipment (including homes and subscribers) required in the OLT. For point-to-point resolution, multiple fiber pairs are required, and each pair must be constructed and maintained.

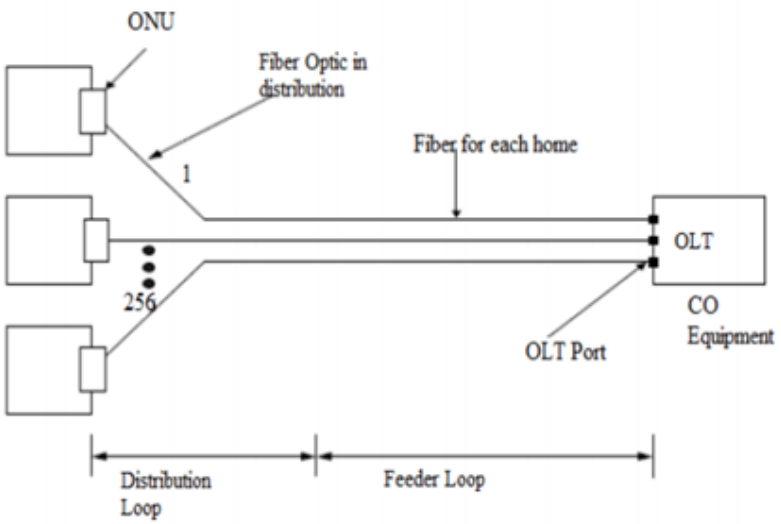

Figure (5) : P2P access architectures

5.5.2. Point-to-multipoint Architecture (P2MP)

Not all network users use the same network resources (meaning available posts and elevations). Multiple users may share high-speed CO lines. Small business environments and home users may use this architecture. As shown in Figure (6), P2MP systems combine passive optical splitters with conventional PON technology. In Asia, EPON is commonly used, but GPON has reached its highest level in Europe.

ATU- AJIEA, Volume: 1, Issue: 2, 12, 30, 2025, © 2025 AJIEA, All Rights Reserved

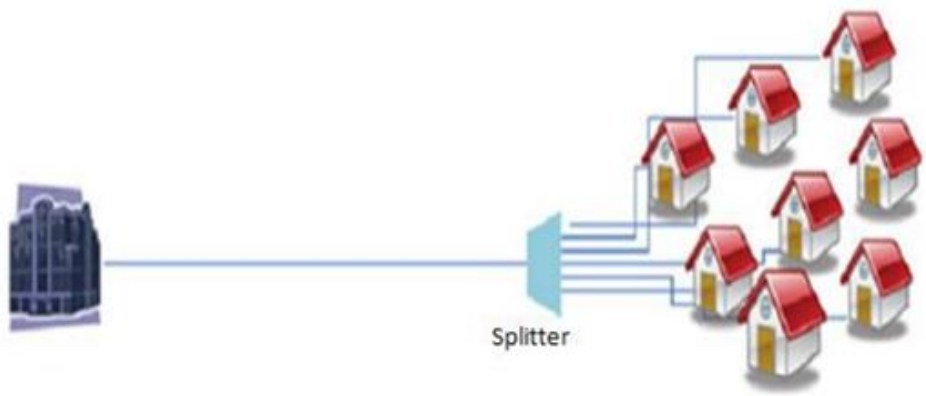

Figure (6) : P2MP topology

P2MP is less expensive to create than P2P because the cost of the common component is shared among all users.

5.5.3. Active Optical Network (AON)

A single, unblemished fiber provides an optical sensor network that transmits all data from a central gateway to a remote node (RN) near the end users. Because the equipment needed to provide television, telephone, and Internet access is connected over conventional Ethernet, it is sometimes referred to as an active Ethernet network.

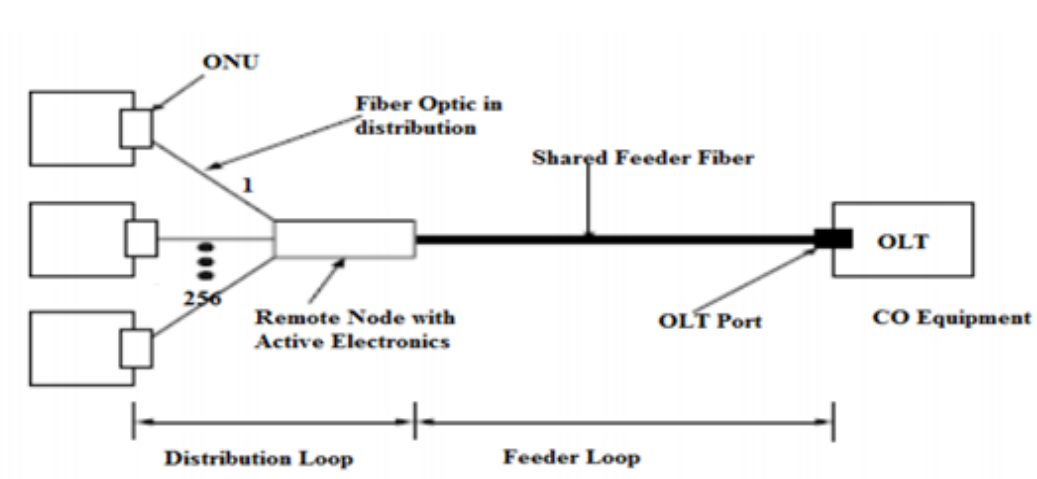

Figure (7) : Active Optical Network (AON)

The remote node contains an active component that evaluates the data frames provided by the OLT and only forwards them to the appropriate network units (ONUs). The remote node connects multiple network segments, including unique fibers for each cabinet, home, and structure. According to the developed solution model, Figure (7) shows the basic components and functions of the AON architecture. A common fiber is used to extend a specific area, which minimizes fiber cost and makes AON superior to a point-to-point network in many ways. This strategy is more scalable than point-to-point.

ATU- AJIEA, Volume: 1, Issue: 2, 12, 30, 2025, © 2025 AJIEA, All Rights Reserved

5.6 Advantages of FTTH

FTTH offers many advantages, some of which include:

1. The network between the CO and the end user has no active components. Therefore, there is no need for a DC power grid, which significantly reduces the demand and maintenance costs of the grid.
2. Fiber has an end user that provides services such as video-on-demand, digital or analog CATV, high-speed Internet, and telephony that generate revenue.
3. FTTH consumes less energy and has a built-in battery backup system.
4. FTTH is scalable, reliable, and secure.
5. FTTH network design is futuristic.

5.7. Optical Network Unit (ONU)

An Optical Network Unit (ONU) is a device used in Fiber to the Home (FTTH) networks to connect end-users to the Passive Optical Network (PON). It is a key component of the PON architecture and is typically installed at the customer premises. The ONU converts optical signals transmitted over the fiber optic cable to electrical signals that can be used by the customer's equipment, such as a router or computer. It also receives and sends data from the customer's equipment and transmits it back to the Optical Line Terminal (OLT) located at the service provider's central office. We can illustrate this device in the image shown in Figure (8). ONUs come in different types and configurations, depending on the specific requirements of the network and the services being offered. They can be standalone units, integrated with a router, or built into a customer's equipment. Some ONUs also support additional features such as WiFi connectivity or Voice over IP (VoIP) services. Overall, the ONU plays a critical role in the deployment of FTTH networks, enabling high-speed broadband connectivity to homes and businesses [8].

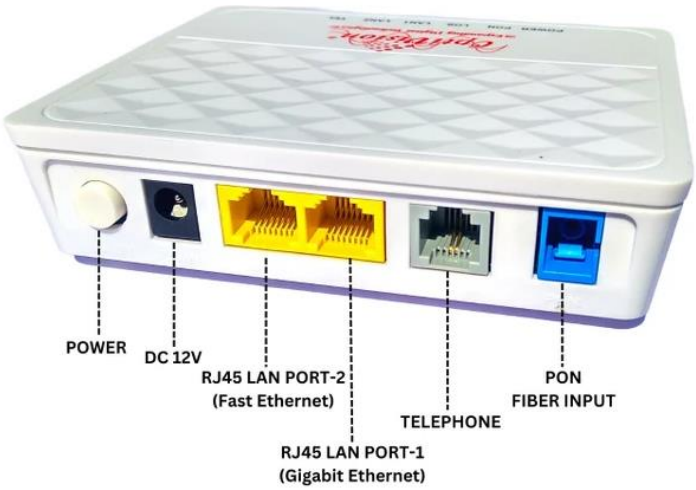

Figure (8) : Optical Network Unit (ONU) in WiFi network

5.8. Network Optical Unit Number

The user side ONU is responsible for changing the transmission environment. In the following section, we will discuss some of the objectives of optical units [9]:

- Has connections to commonly used terminals.
- It implements the transmission protocol and uses optical terminals.

ATU- AJIEA, Volume: 1, Issue: 2, 12, 30, 2025, © 2025 AJIEA, All Rights Reserved

- It integrates and differentiates signals.
- Converting an electrical indicator to an optical one and vice versa.

Fiber to the curb, fiber to the building, and fiber to the home are just a few examples of the different combinations possible.

5.9. Examination of Optimization Methods

One of the proposed solutions for this task is to utilize different optimization methods, as selecting the optimal site for the fiber optic network can reduce the cost of setting up the FiWi network. This research aims to optimize ONU placement to reduce the cost of setting up a FiWi network.

5.10. Metaheuristic Algorithms

In recent decades, the increasing complexity and difficulty of real-world problems have led to the need for more reliable optimization techniques, especially meta-heuristic optimization algorithms. These techniques are mainly stochastic and estimate optimal solutions for various optimization problems. Such optimization algorithms replace conventional optimization algorithms due to gradient-free mechanisms and high local optimal availability. The optimization process finds the optimal decision variables of a function or a problem by minimizing or maximizing its objective function. In general, real-world and optimization problems have nonlinear constraints, complex computing time, non-convex and extensive search spaces, which make their solution challenging [10].

Meta-heuristic optimization algorithms have two important search strategies: (1) exploration/variation and (2) exploitation/intensification. The ability to explore the search space is world-class. This ability is related to avoiding local optima and solving local optima entrapment. In contrast, exploitation is the ability to discover nearby promising solutions to improve their quality locally. The perfect performance of an algorithm requires a proper balance between these two strategies. All population-based algorithms use these features, but with different operators and mechanisms.

One of the common classifications of meta-heuristics is based on the inspiration of evolutionary algorithms, swarm intelligence algorithms, physics-based methods, and human-based methods. Evolutionary algorithms simulate habits in natural evolution and use operators motivated by biological behaviors such as crossover and mutation. A common evolutionary algorithm is the genetic algorithm (GA), which is motivated by Darwinian evolutionary ideas. The conventional methods of this group include evolutionary planning, differential evolution, and evolutionary strategy.

Swarm intelligence algorithms are another group of meta-heuristics that simulate the behavior of animals in movement or hunting groups. The main characteristic of this group is the sharing of information about living organisms of all animals through the optimization period. The conventional methods of this group include the krill-herd algorithm, the salp swarm algorithm, searching for symbiotic organisms, the cosine-sine algorithm, and dolphin echolocation.

Physics-based methods are another group of optimization algorithms. This group originates from physical laws in real life and typically describes the relevance of search solutions based on control laws rooted in physical methods. The most common algorithms used in this group are: simulated annealing, gravitational search algorithm, multiple optimizer, and charging system search.

The final group of optimization is the human-based methods, which are motivated by human cooperation and human behavior in societies. One of the most used algorithms in this group is the imperialist competitive algorithm, which is motivated by the socio-political growth of man. Another algorithm of this group is the training-based optimization algorithm [11].

ATU- AJIEA, Volume: 1, Issue: 2, 12, 30, 2025, © 2025 AJIEA, All Rights Reserved

5.11. Arithmetic Optimizer Algorithm

AOA is inspired by the use of arithmetic operators in solving arithmetic problems (using simple arithmetic operators, such as addition, subtraction, multiplication, and division as mathematical optimization, to search for an optimal solution that meets the standards of a set). AOA is divided into exploration and exploitation terms. Exploration refers to finding a range of promising optimal solutions in a wide search space, and exploitation refers to quickly finding the optimal solution in the range of promising solutions and convergence.

In general, population-based algorithms start their improvement processes (optimization process) with a set of randomly generated candidate solutions. This set of solutions generated by a set of optimization rules is gradually improved and iteratively evaluated by a specific objective function. This is the nature of optimization methods. Since population-based algorithms seek to find the optimal solution of optimization problems randomly, obtaining the solution in one run is not guaranteed. Nevertheless, the probability of obtaining the global optimal solution for the given problem increases with a sufficient number of random solutions and optimization iterations.

Despite the differences between meta-heuristic algorithms in the field of population-based optimization methods, the optimization process consists of two main steps: the first refers to extensive search space coverage using search agents of an algorithm to avoid local solutions. The second is the accuracy of the solutions obtained in the exploration phase.

Figure (9) shows the Discovery and Exploitation Mechanisms in the AOA Algorithm. This algorithm is a population-based heuristic capable of solving optimization problems without computing their derivatives. It applies two main phases: exploration versus exploitation. The first refers to broad coverage of the search space using algorithmic search operators to avoid local solutions. The second relates to improving the accuracy of the solutions obtained during the exploration phase, and this will be explained in the following topics [13].

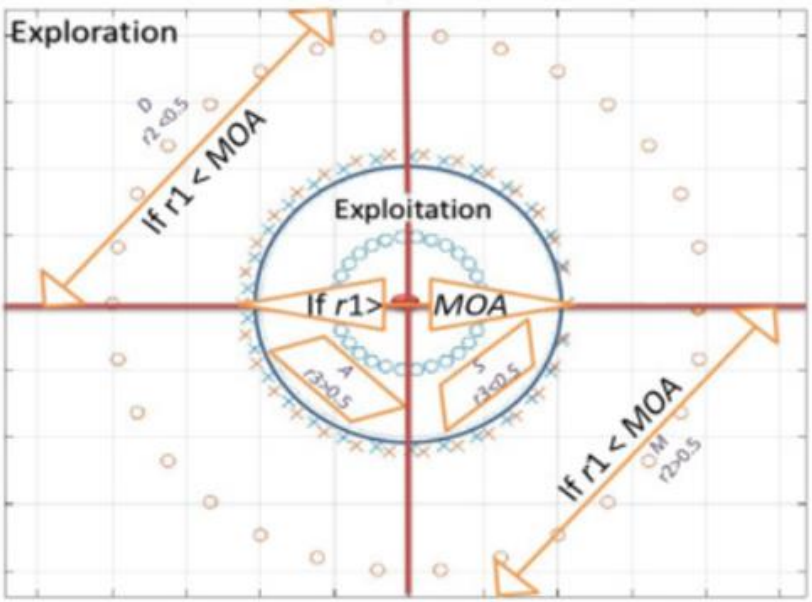

Figure (9) : Discovery and exploitation mechanisms in the search stages of the AOA algorithm.

6. The Proposed Method

ATU- AJIEA, Volume: 1, Issue: 2, 12, 30, 2025, © 2025 AJIEA, All Rights Reserved

6.1. Introduction

The fiber wireless access network (FiWi) is proposed as a hybrid access network for the sixth generation of telecommunications, which was fully described in the previous chapters. FiWi combines optical access networks with wireless access technology to provide the potential benefits of both. The location of the optical network unit (ONU) in the FiWi network, which is crucial for optimal utilization of network resources and performance enhancement in terms of cost and throughput improvement, is a key issue in this type of network. FiWi network deployment and the ONU optimal location problem are both discussed in this thesis. Also, an arithmetic optimization algorithm is used for positioning ONUs based on different wireless router distributions. The proposed method is further explained in the following sections of this chapter.

6.2. Generalities of the Proposed Method

Our goal is to provide a method with suitable efficiency for locating optical fiber service units to serve customers. In the problem of locating optical fiber service units for a telecommunication system, two basic challenges conflict with each other. The first challenge is the problem of high-efficiency coverage for the entire target area and the users in it. A telecommunication system with proper efficiency should provide maximum coverage in order to provide services to customers. In order to achieve maximum coverage, the number of ONU serving units should be increased so that these units can provide maximum coverage for users. However, the second challenge of a telecommunication system with proper efficiency is that the cost of implementing these infrastructures increases with the increase in the number of ONUs. Therefore, in order to reduce the implementation costs, it should be tried so that these units do not overlap with each other, and as a result, the number of these ONUs should be reduced. As a result, our optimization problem in this work is a multi-objective optimization problem. One of the suitable methods for solving such problems is the use of meta-heuristic methods. Therefore, in this work, we will use the arithmetic optimization algorithm to determine the optimal location of optical fiber ONU serving units. Its steps are shown in the block diagram in Figure (10) below[15].

ATU- AJIEA, Volume: 1, Issue: 2, 12, 30, 2025, © 2025 AJIEA, All Rights Reserved

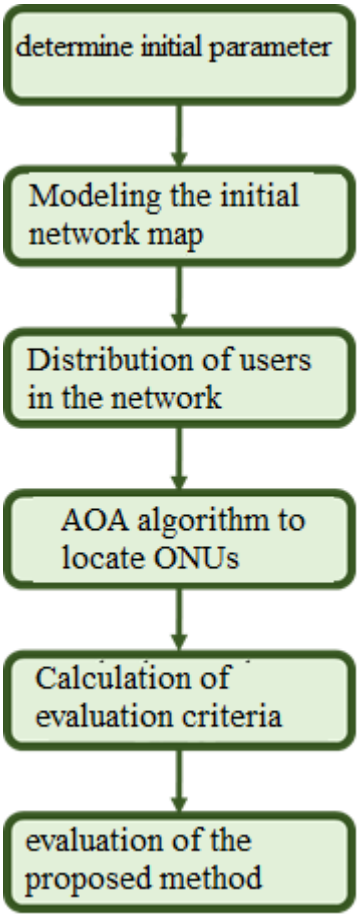

Figure (10) : Flowchart of the proposed method

6.3. Steps of the Proposed Method

6.3.1. System Modeling

Before ONUs are optimally placed in a FiWi network, it is necessary to model the complete network and have a complete understanding of its components and features. In this section, we model the ideal FiWi network and describe the proposed approach to optimize ONU location in this network. Figure (11) shows a FiWi network. In the projected FiWi network, users are distributed with a uniform distribution. The following are also critical components of the FiWi network:

- Optical line terminal (OLT):

The end point of optical network services is OLT, which is a piece of hardware.

- Optical network unit: ONU

It is the main component of the network that connects users to services.

- Splitter:

Fiber optic internet is divided between ONUs using a splitter.

ATU- AJIEA, Volume: 1, Issue: 2, 12, 30, 2025, © 2025 AJIEA, All Rights Reserved

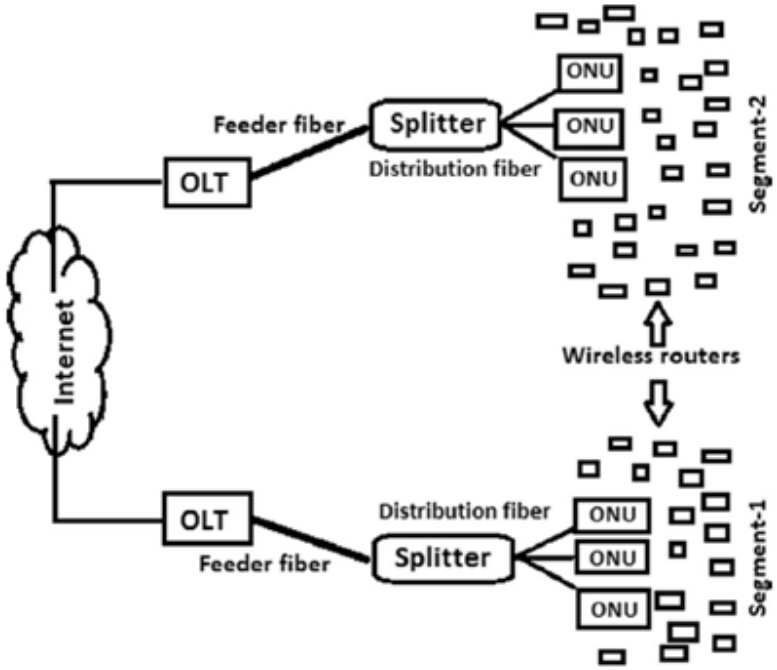

Figure (11) : FiWi network template

In the proposed FiWi network, the following assumptions are considered:

- ✓ Map size and number of users are predetermined and clear.
- ✓ ONUs perform the same function and have the same coverage radius.
- ✓ The cost of network deployment depends on the location of the ONUs in the FiWi network.
- ✓ The grid is square and has the ratio A*A.

6.3.2. Arithmetic Optimizer Algorithm

Along with geometry, algebra, and analysis, calculus is one of the fundamental components of number theory and an important component of contemporary mathematics. Traditional arithmetic measures, such as multiplication, division, addition, and subtraction, are often used to analyze numerical data. Mathematical computations involving division operators (D) or multiplication operators (M) in relation to algebraic expressions produce sparse values or judgments (based on different regimes) that adhere to the discovery search process. However, due to the large dispersion, these operators (D and M) are difficult to approach the target, unlike other operators (S and A). The effect of the distribution values of different operators is shown using a function. Consequently, the near-optimal answer that may be determined after several trials is identified by heuristic (iterative) search. The search phase takes place through complex communication between them in order to help the other phase (exploitation). Optimization is a method to obtain a better alternative based on two main search strategies (department location (D) and additive search strategy), described in the following equations. The AOA exploration operator randomly searches the search area in several locations (Eq. 2). The first operator (D) in this step (the first rule in Eq. (2) is conditioned by r2 < 0.5, and Other operators (M) are ignored until this operator completes its current work. This phase of the search is conditioned by the acceleration function (MOA) (Equation (1)). Note that a random divisor is considered for the element to generate additional diversification cycles and explore other regions of the search space. To imitate the behavior of arithmetic operators, we used the simplest possible rule[13]:

ATU- AJIEA, Volume: 1, Issue: 2, 12, 30, 2025, © 2025 AJIEA, All Rights Reserved

$$MOA(C_{Iter}) = Min + C_Iter \times (\frac{Max - Min}{M_Iter}) \quad (1)$$

$$x_{i.j}(C_{Iter} + 1) = \begin{cases} best(x_j) \div (MOP + \in) \times \left((UB_j - LB_j) \times \mu + LB_j\right). \ r2 < 0.5 \\ best(x_j) \times MOP \times \left((UB_j - LB_j) \times \mu + LB_j\right) \ .otherwise \end{cases} \quad (2)$$

After using the construction function described in the previous mathematical relationship to illustrate the exploratory behavior of AOA. The influence and behavior of arithmetic operators in mathematical calculations were calculated, as shown in Figure 5. A construction function using four mathematical operations was used to demonstrate the influence of different operator distribution values. Thus, the exploration search discovers a near-optimal solution that can be deduced after several attempts (iterations). In addition, exploration operators (D and M) were implemented in this optimization phase to support the next phase (exploitation) of the search process by improving the connection between them. After using the construction function described in the previous mathematical relationship to illustrate the exploratory behavior of AOA. The influence and behavior of arithmetic operators in mathematical calculations were calculated, as shown in Figure (12). A construction function using four mathematical operations was used to demonstrate the influence of different operator distribution values. Thus, the exploration search discovers a near-optimal solution that can be deduced after several attempts (iterations). In addition, exploration operators (D and M) were implemented in this optimization phase to support the next phase (exploitation) of the search process by improving the connection between them.

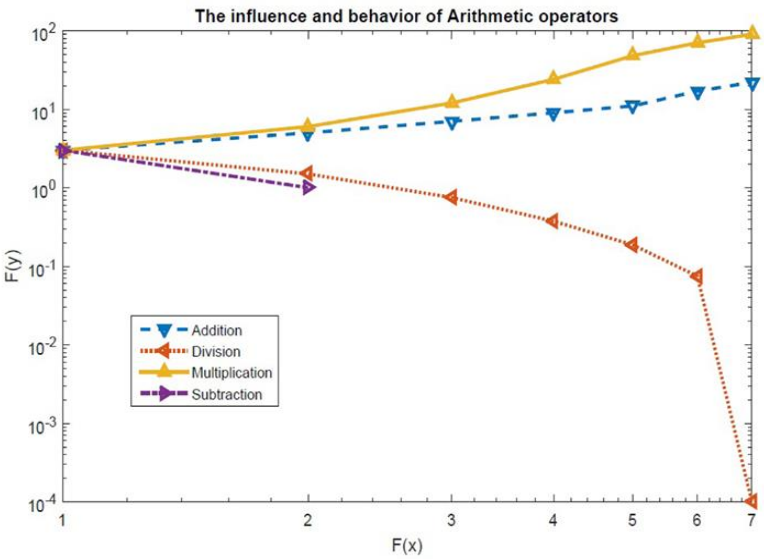

Figure (12) :The influence and behavior of the four math operators (A, D, M, and S) in solving mathematical calculations.

Practically, using the MATLAB simulation program, we can apply the equations of the computational optimization algorithm, assuming that we used a minimum of 50 possibilities and a maximum of 200 possibilities, as follows:

ATU- AJIEA, Volume: 1, Issue: 2, 12, 30, 2025, © 2025 AJIEA, All Rights Reserved

```
nVar=20; %Number of Decision Variables (2*Number of ONUs)
Solution_no=50; %Number of search solutions
F_name='F1'; %Name of the test function
M_Iter=200; %Maximum number of iterations
[LB,UB,Dim,F_obj]=Get_F2(F_name,x_max,nVar); %Give details of the
underlying benchmark function
[Best_FF,Best_P,Conv_curve,C1,C2]=AOA2(Solution_no,M_Iter,LB,UB,Di
m,F_obj); % Call the AOA
BestCost=Conv_curve;
```

6.3.3. Optimum Location of ONUs Using AOA Algorithm

In this section, the method of selecting the objective function of the AOA algorithm for the optimal location of ONUs is explained. The objective function is chosen in such a way that, in addition to the maximum coverage of the FiWi network in order to ensure the service to all users, the non-overlapping of the ONUs is also considered. This issue causes minimal use of ONUs and cost reduction in FiWi construction.

6.3.3.1. Objective Functions

The most important part of designing a meta-heuristic algorithm is precisely defining the objective function. In this work, we have two objective functions used with the AOA algorithm. Our objective functions are as follows:

1- Maximum coverage to users through ONUs.
2- Minimum overlap of ONUs.

Also, the evaluation function of the AOA algorithm is determined based on these two objective functions. In the following section, the steps for selecting the evaluation function are described.

6.3.3.2. Maximum Coverage in the Network

Assuming that each ONU is located at point P in FiWi and R is its coverage radius, the ONU coverage area is defined as a circle with radius R and center P. As a result, the maximum coverage provided by ONUs is defined as the first objective function as follows[14]:

$$C1(i) = Nc * Pc \tag{3}$$

Nc parameter in relation (3) is considered as points without network coverage. The fixed amount of the fine is Pc. Calculation of unreachable points of the FiWi network is the goal.

6.3.3.3. Minimal Overlap between ONUs

Considering the coverage radius of R1 and R2 for ONUs A1 and A2, which are located in positions P1 and P2, respectively, equation (4) should be used to calculate the distance between two ONUs:

ATU- AJIEA, Volume: 1, Issue: 2, 12, 30, 2025, © 2025 AJIEA, All Rights Reserved

$$Dis(A1.A2) = \sqrt{(P1_x - P2_x)^2 + (P1_y - P2_y)^2} \tag{4}$$

The amount of overlap between them is equal to zero if *Dis(A1.A2)>R1+R2*; otherwise, the following formula is used to determine the amount of overlap.

$$OVR(A1.A2) = R1 + R2 - Dis(A1.A2) \tag{5}$$

How to calculate the overlap is clear in Figure (13). According to relation (5), the overlap in the right figure is zero, and in the left figure, the convergence radius is determined by summing the differences between the two ONUs.

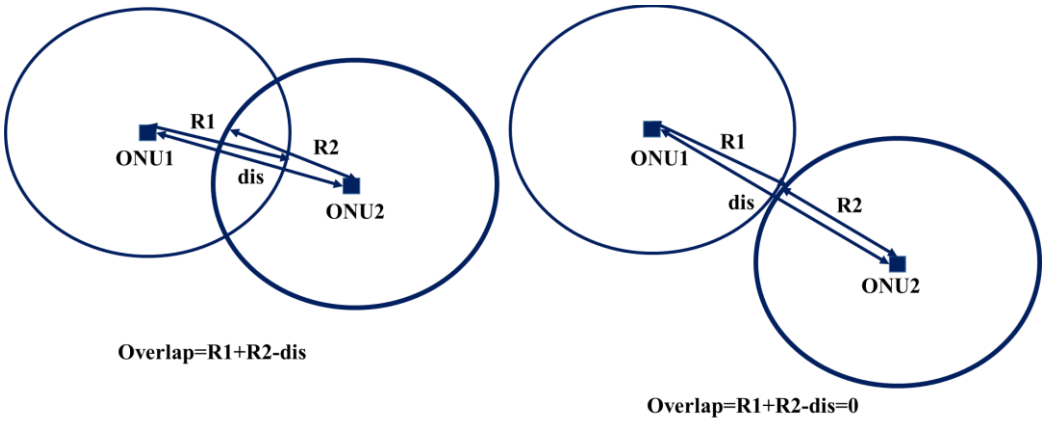

Figure (13) : Checking the overlap relationship

Equation (6) may be used to generate the minimum overlap objective function if we accept n% overlap as acceptable[15]:

$$OVR(A1.A2) = \begin{Bmatrix} 0.1 * (R1 + R2) - Dis(A1.A2) & Dis(A1.A2) < 0.1 * (R1 + R2) \\ 0 & OW \end{Bmatrix} \tag{6}$$

As a result, the overlapping values of ONUs as the second objective function are assumed as follows:

$$C2(i) = (\sum_{i \in A} \sum_{j \in A} OVR(i.j)) \tag{7}$$

Finally, based on the first and second objective functions, the overall objective function is defined as follows:

$$CT(i) = C1(i) + C2(i) \tag{8}$$

In addition, the definition of the evaluation function is based on the relation (9):

$$fT(i) = \frac{\alpha}{\beta + CT(i)}$$

ATU- AJIEA, Volume: 1, Issue: 2, 12, 30, 2025, © 2025 AJIEA, All Rights Reserved

(9)

In order for the denominator of the fraction not to reach 0, the parameter β is considered an integer. The fitness ratio is also α.

7. Evaluation of the Simulation Results

7.1. Introduction

Our proposed approach for the ideal placement of ONUs in the FiWi network structure was theoretically analyzed in Point Six. We also explained the assumptions of a FiWi network along with its structure. As for this point, we discuss the numerical simulation results of the AOA algorithm to determine the location of ONUs. The evaluation criteria for the proposed approach, the specification of the proposed algorithm, and the simulation results are explained in the following sections of this chapter.

7.2. Evaluation Criteria of the Proposed Method

The performance of the proposed strategy in the ideal location for ONUs in the FiWi network is evaluated in this study using the following criteria:

- ✓ Duration of calculations
- ✓ The total cost, which is equivalent to the distance of users from ONUs and is determined using the following relationship:

$$D_{total} = \sum_{i=1}^{N_{ONU}} \sum_{j=1}^{Ni} \sqrt{\left(X_i - x_j\right)^2 + \left(Y_i - y_j\right)^2} \tag{10}$$

In relation (10), NONU represents the total number of ONUs, and Ni represents the number of users connected to ONU number *i*.

- ✓ Cost improvement, which is defined by equation (11):

$$cost_improvement = \frac{\Delta cost}{total_cost} \times 100 \tag{11}$$

The variance between the cost function of the greedy mode (total distance) and the cost function of the optimized model is indicated by "Δcost". The total cost in greedy mode is also expressed by *total_cost*.

7.3. System Modeling

First, the network parameters and the proposed technology must be defined, followed by a simulation of the Wi-Fi network and the proposed method to obtain the evaluation criteria. Table (1) identifies these variables. We used MATLAB to simulate hypothetical data related to the number of subscribers and their distribution in a specific area, the maximum user generation, and the network size. These were incorporated into the program using the mathematical equations discussed in previous topics.

Table (1) : desired FiWi network parameters

ATU- AJIEA, Volume: 1, Issue: 2, 12, 30, 2025, © 2025 AJIEA, All Rights Reserved

Parameter	Symbol	Explanation
Number of Particles	NVar	Number of Particles =2*(number of ONU)
Population Number	NPop	The number of population in each iteration
Max Generation	MaxIt	number of max iteration
Network size	-	Size map 2000*2000.
x_j	IP_x	The x location of jth user.
y_j	IP_y	The y location of jth user.
X_onu_i	x_ONU	The x location of ith ONU.
Y_onu_i	y_ONU	The y location of ith ONU.
D_{ij}	distance_ONU_user	Distance between ONU i and user j,

7.4. Examining the Results of Simulations

The desired FiWi network is shown in the first stage of the simulation. A network with 100 users who are evenly distributed in the network environment. Figure (14) considers 10 ONUs in the network. The location of the optimal ONUs generated by our proposed technique is shown in Figure (14-a). Also, Figure (14-b) shows how the greedy algorithm has placed the ONUs.

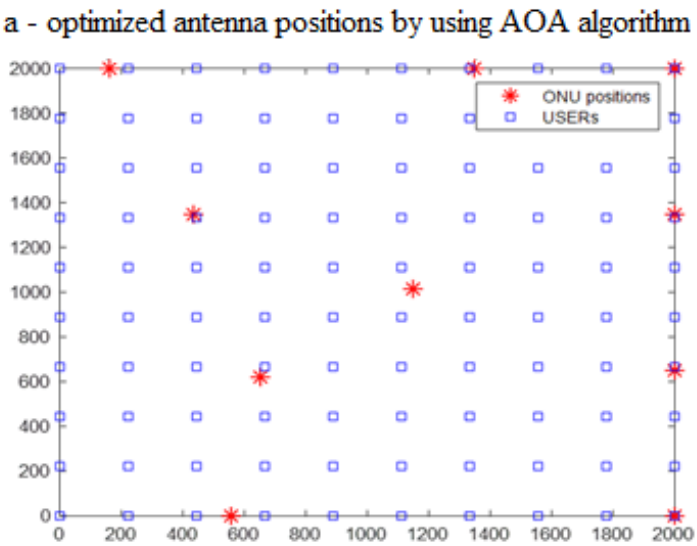

ATU- AJIEA, Volume: 1, Issue: 2, 12, 30, 2025, © 2025 AJIEA, All Rights Reserved

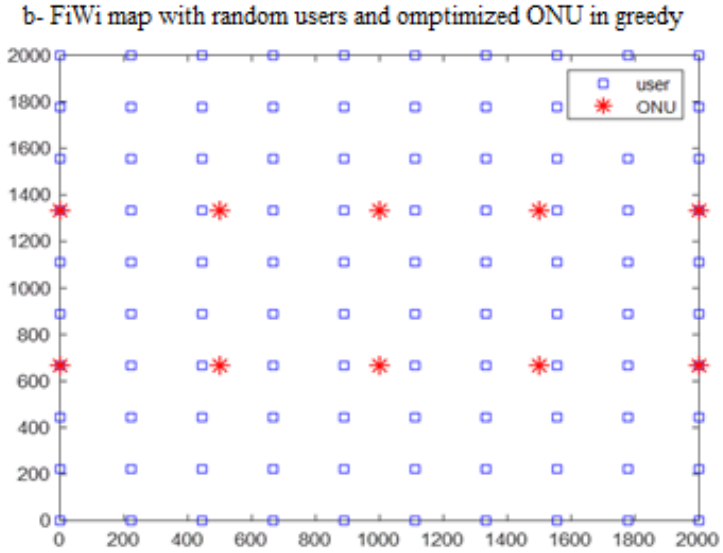

Figure (14) : Network model containing 100 users and 10 ONUs with a) proposed method on top and b) greedy distribution on the bottom

Also, Figure (15) shows the overall distance between users in each ONU for the greedy mode and based on our proposed method. Figure (15-a) is related to our proposed strategy, while Figure (15-b) is related to the greedy approach.

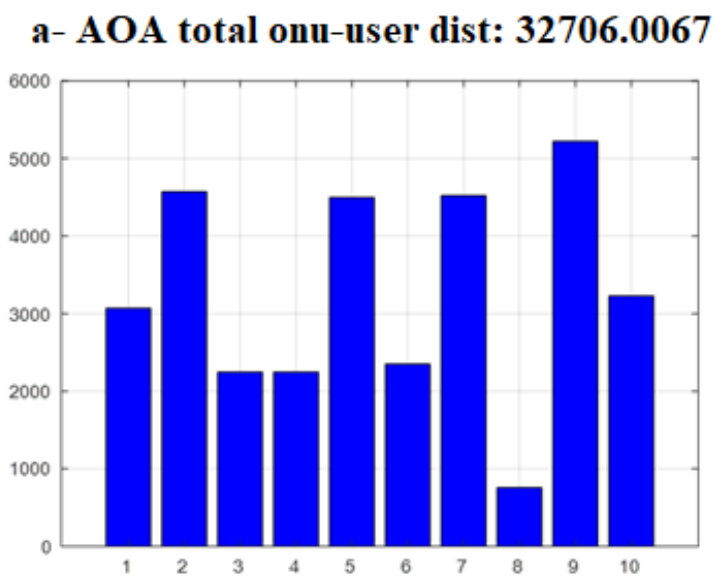

ATU- AJIEA, Volume: 1, Issue: 2, 12, 30, 2025, © 2025 AJIEA, All Rights Reserved

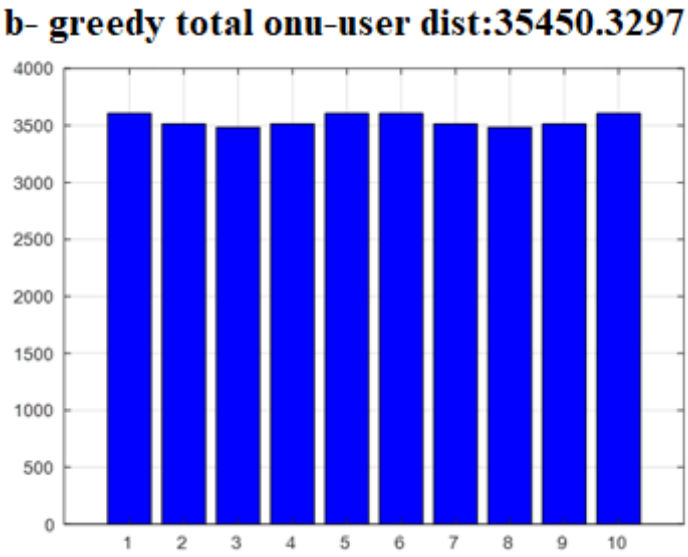

Figure (15) : The sum of the distance of users of each ONU from it in the case of a) the proposed method above and b) greedy distribution below

7.4.1. Examining the Duration of Implementation of the Proposed Method against the Number of Different ONUs

A review of the execution time of the AOA algorithm for ONU types is presented in this section. Figure (16) examines the number of different ONUs (horizontal axis) with the execution time of the AOA algorithm (vertical axis). As can be seen, the execution time of the proposed algorithm increases with the increase in the number of ONUs.

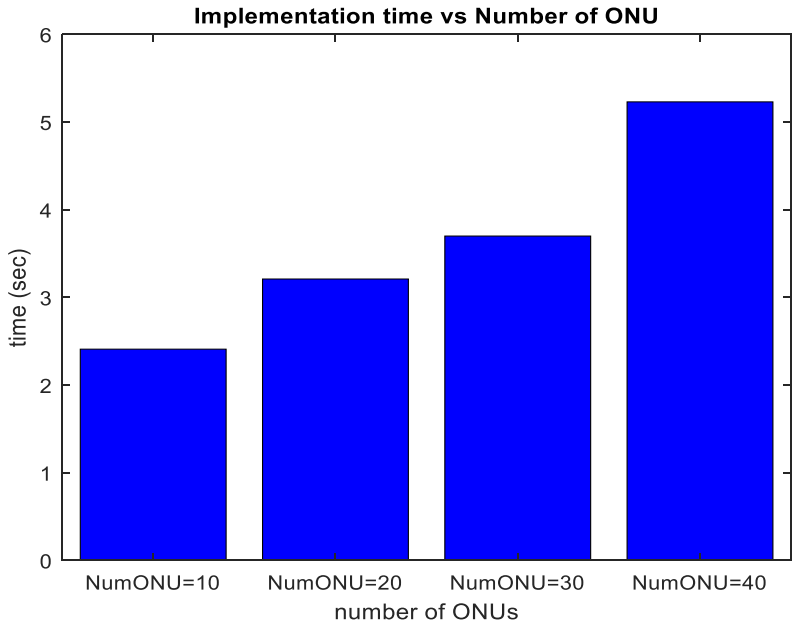

Figure (16) : AOA algorithm execution time against the number of different ONUs

ATU- AJIEA, Volume: 1, Issue: 2, 12, 30, 2025, © 2025 AJIEA, All Rights Reserved

7.4.2. Checking the Appropriate Coverage of Users by ONUs

In this section, how to cover users through different number of ONUs and for the greedy method and our proposed technique are described in terms of the distance between users and ONUs. In Figure (17), there are 10 ONUs in the upper part and 6 ONUs in the lower part. The right side belongs to the greedy technique, and the left side belongs to our proposed (AOA) technique. The dimensions of the grid are 2000x2000. As seen In the figure, the distance of users from ONUs decreases as the number of ONUs increases.

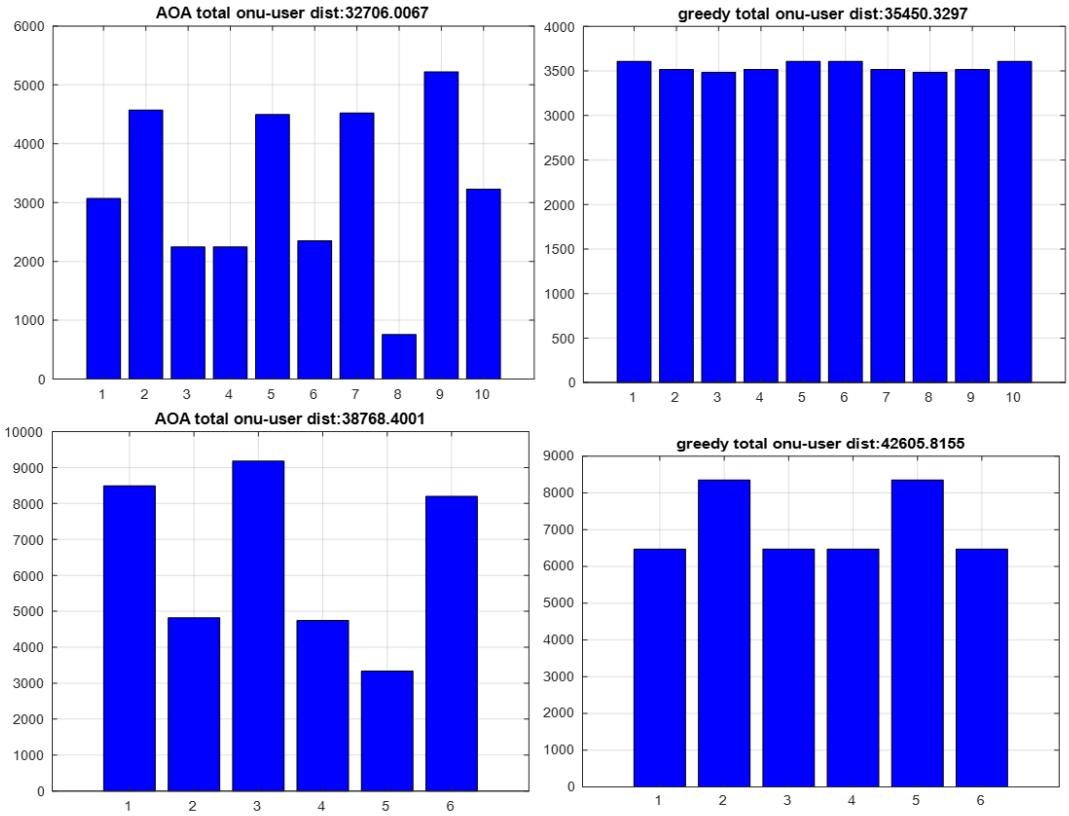

Figure (17) : Checking the appropriate coverage of users by ONUs (top 10 ONUs and bottom 6 ONUs)

7.4.3. Investigating the Optimal Location of the Proposed Method against the Greedy Method

Figure (18) shows the heat map of the distance of ONUs located from each other. Dark blue on this map represents the shortest distance, while yellow represents the longest. Since the distance of each ONU is equal to zero, a dark blue color can be seen in the main diameter of the image. The left image in this figure shows localization using the AOA method, while the right image shows the greedy search technique. As can be seen, the AOA algorithm produces ONUs that are more evenly distributed over the map than the greedy case. However, the greedy approach greatly yellows the corners of the image, which indicates that the map coverage is uneven and the distances are not uniformly distributed.

ATU- AJIEA, Volume: 1, Issue: 2, 12, 30, 2025, © 2025 AJIEA, All Rights Reserved

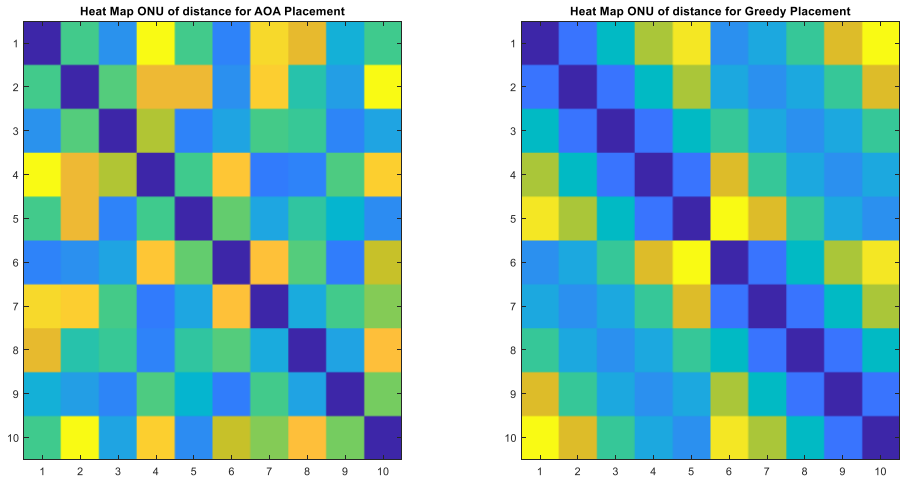

Figure (18) : Distance heat map of located ONUs

Figure (19) also shows the convergence curve of the AOA algorithm. In this figure, it is clear that the algorithm has reached convergence after almost 100 steps.

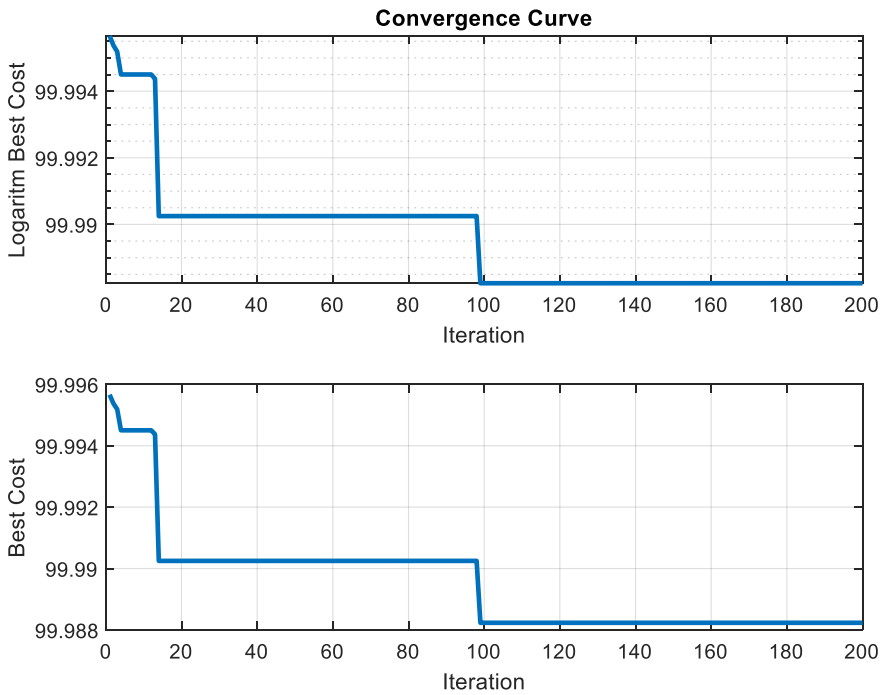

Figure (19) : AOA algorithm convergence curve a) in logarithmic form and b) in simple form

7.4.4. Comparing the Results of the Proposed Technique with the Results of the Reference Article

In this section, the improvement of the proposed method is compared with the existing algorithms in the reference article [19]. The cost improvement is determined using the equation (11), and due to the unpredictability of the results of the AOA algorithm, the average of the results obtained from 30 executions of the simulation program is given in the table. In Table (2), the proposed method is compared with other methods in terms of cost improvement, and in Table (3), the proposed method is compared with other

ATU- AJIEA, Volume: 1, Issue: 2, 12, 30, 2025, © 2025 AJIEA, All Rights Reserved

methods in terms of execution time. As it is known, our proposed method works better than the previous methods[17].

Table (2) : performance comparison of the proposed method with other methods in terms of cost improvement criteria

Method	Final Cost
GOA	**196**
WOA	**179**
HHO	**171**
The proposed method (AOA)	**99**

Table (3) : Comparison of the performance of the proposed method with other methods in terms of time[18]

Method	time (seconds)
GOA	**432.134**
WOA	**399.333**
HHO	**111.480**
The proposed method (AOA)	**2.411**

8. Conclusion

Great bandwidth and high data transfer rate are increasingly demanded in telecommunication systems in the modern world. Optical and wireless access networks have been established in these areas. One of the top access technologies is wireless access networks, which have advantages such as reliability, cost-effectiveness, flexibility, ease of setup, and wide coverage. However, this technology is not able to maintain a good level of service despite transferring huge amounts of data. On the contrary, fiber optic technology offers high bandwidth. However, the distance of users from the central office (CO) and the time required to access the services are barriers to determining their performance. In fact, optical networks lack flexibility and mobility and are cost inefficient. FiWi (wireless fiber) hybrid access networks seem more attractive than any of the stand-alone access solutions in order to take advantage of the huge bandwidth capacity of optical access networks and the ubiquity, mobility of wireless access networks. This hybrid network offers affordable and excellent services to end users. To date, intensive research has been conducted to combine optical and wireless technologies to improve this advanced coupling. In these networks, the best placement

ATU- AJIEA, Volume: 1, Issue: 2, 12, 30, 2025, © 2025 AJIEA, All Rights Reserved

of ONUs increases the operational capability of the system, makes the system cheaper, and enables the best use of resources. Many solutions (deterministic and stochastic) have been used to address this optimization issue. Several deterministic (such as greedy algorithm) and meta-heuristic methods have been used to optimize the placement of many ONUs.

Arithmetic optimization Algorithm (AOA) is used in this study to place a number of ONUs in the FiWi access network at the most optimal location. The placement of users and ONUs is simulated in the FiWi network by the greedy method and the AOA method. Several meta-heuristic techniques are compared with simulation findings. The results show that the AOA method performs better than the existing meta-heuristic algorithms and provides the most optimal value of the objective function.

9. References

[1] A.S. Shibghatullah, M.M. Mohammed, M. Doheir, and A.N. Majed. "Fiber-To-The-Home (FTTH) Architecture for Mosul, Iraq." *International Journal of Human and Technology Interaction (IJHaTI)* 1.1 (2017): 37-42.

[2] Abaas, Thamer J., Abdul Samad Shibghatullah, and Mustafa Musa Jaber. "Use information sharing environment concept to design electronic intelligence framework for support e-government: Iraq as case study." *Advances in Computing* 4.1 (2014): 22-24.

[3] S. Sugumaran, D.N. Lakshmi, S. Choudhary " An overview of FTTH for optical network " Advances in Smart …, 2021 - Springer.

[4] Akshita Gupta, Hritik Goel, Vivek Bohara . "Performance Evaluation of Integrated XG-PON and IEEE 802.11ac-based EDCA Networks " *Conference Paper · December 2020*.

[5] Al-Quzwini, Mahmoud M. "Design and Implementation of a Fiber to the Home FTTH Access Network based on GPON." *International Journal of Computer Applications* 92.6 (2014).

[6] Ghazi, Alaan, et al. "Performance Analysis of ZCC-Optical-CDMA over SMF for Fiber-To-The-Home Access Network." *Journal of Physics: Conference Series*. Vol. 1529. IOP Publishing, 2020.

[7] Keiser, Gerd. *FTTX concepts and applications*. John Wiley & Sons, 2006.

[8] Damon, " https://www.vsolcn.com/blog/what-is-onu.html" · Published on: June 27, 2025

[9] Naeem, Abid, et al. "Fiber to the Home (FTTH) Automation Planning, Its Impact on Customer Satisfaction & Cost-Effectiveness." *Wireless Personal Communications* 117 (2021): 503-524.

[10] Leonel Hernandez, Juan Albas, Jair Camargo, César De La Hoz, Fachrul Kurniawan, Andri Pranolo, " Design of an FTTH (Fiber To The Home) network for improving voice, broadband, and television services in hard-to-reach areas the Colombian case " Science in Information Technology Letters Vol. 3, No. 2, November 2022 .

[11] Mycek, Mariusz, Michał Pióro, and Mateusz Żotkiewicz. "MIP model for efficient dimensioning of real-world FTTH trees." *Telecommunication Systems* 68 (2018): 239-258.

[12] Li, Jinkai, et al. "Discussion on Installation and Maintenance of Optical Fiber Transmission Equipment Based on Computer Controlled Mode." *Journal of Physics: Conference Series*. Vol. 1744. No. 2. IOP Publishing, 2021.

[13] Laith Abualigaha, Ali Diabatb, Seyedali Mirjalilid, Mohamed Abd Elazizf, Amir H. Gandomih, "The Arithmetic Optimization Algorithm" *Journal of ELSEVIER Available online 11 January 2021*

ATU- AJIEA, Volume: 1, Issue: 2, 12, 30, 2025, © 2025 AJIEA, All Rights Reserved

[14] Nilesh Chatur, Tushar Bose, Aneek Adhya "Planning Cost-Efficient FiWi Access Network With Joint Deployment of FWA and FTTH" *IEEE Transactions on ..., 2024*

[15] Hojjat Emami, Saeid Pashazadeh. " Positioning multiple optical network units in fiber-wireless networks: An efficient hybrid K-harmonic means clustering approach" *Optical Fiber Technology*, *May 2024* .

[16] Zainab Khafaji, " optimal design of access points in fiber optic network with the help of linear programming" ISSN: 2582-0745 2024 Vol. 7, No. 05.

[17] Asgarirad, Mohammadreza, and Mansour Nejati Jahromi. "A taxonomy-based comparison of FTTH network implementation costs." *Majlesi Journal of Electrical Engineering* 14.2 (2020): 71-80.

[18] Singh, Puja, and Shashi Prakash. "Optimizing multiple ONUs placement in fiber-wireless (FiWi) access network using grasshopper and Harris hawks optimization algorithms." *Optical Fiber Technology* 60 (2020): 102357.

[19] Singh P, Prakash S. "Optimizing multiple ONUs placement in fiber-wireless (FiWi) access network using grasshopper and harris hawks optimization algorithms. Optical Fiber Technology". 2020 Dec 1;60:102357.

ATU- AJIEA, Volume: 1, Issue: 2, 12, 30, 2025, © 2025 AJIEA, All Rights Reserved