Al Furat Journal of Innovations in Engineering Applications (AJIEA)
ISSN - 3105-3149

Adaptive Artificial Neural Network-Based Control of Active AC-DC Boost Converter for Power Factor Correction

Ahmed Ammar[1], Ali Abdul Abbas Al-Bakry[2] ,Ahmed Kareem Abdullah[3]
[1,3] Department of Electrical Engineering Techniques, Al-Furat Al-Awsat Technical University Al-Mussaib Technical College Babylon, Iraq.
[2] College of Engineering, Al-Ameen University, Iraq.
Emails: ahmed.ammar.tcm@student.atu.edu.iq, Prof.dr.ali@Alameen.edu.iq , ahmedalbakri2012@atu.edu.iq

https://doi.org/110.46649/ajiea.v1.2.4a.30.12.2025

Abstract- The control strategy of a three-phase diode bridge rectifier and a boost-type DC-DC converter system by artificial neural networks (ANNs) for efficient power factor correction (PFC) and output voltage regulation is proposed in this paper. Three-phase AC input is rectified by a six-pulse diode bridge, generating a pulsating DC voltage, which is then fed to a boost-converter stage. In the outer voltage loop, amplifying the reference current's amplitude, the first ANN controller is also introduced, and the second one is incorporated in the inner current loop to establish the inductor current with an appropriate phase in line with the input voltage. This phase-locked loop (PLL) locks the current reference to the AC source and allows the system to operate at a unity power factor. Compared with conventional proportional-integral (PI)-based approaches, ANN controllers are trained to mitigate the effect of nonlinearities, parameter uncertainties, and dynamic disturbances. The simulation results confirm the proposed method and show enhanced dynamic performance, lower THD and compliance with the power quality standards.

Keywords: Active power factor correction, phase-locked loop (PLL), power factor correction, artificial neural network (ANN), DC-DC converter for PFC.

1. Introduction

Because of the increasing presence of nonlinear and power-electronic-based loads in power systems, there has been an increase in the need for efficient AC-DC conversion systems that have improved power quality and dynamic performance [1]. The three-phase diode bridge rectifier and DC-DC converter architecture have been utilized in various electric car chargers, renewable energy systems, and industrial motor drives [1–3]. This is because it is both cost-effective and straightforward. On the other hand, this configuration has the intrinsic drawback of having a low power factor and high input current harmonics. These drawbacks will negatively impact the system's efficiency and will most likely result in the failure to achieve power quality requirements such as IEEE 519 [4].

Several power factor corrections (PFC) approaches have been presented to make the shape of the input current waveform sinusoidal and in phase with the supply voltage [5]. This is done to minimize the adverse effects of these drawbacks. PI controllers that have been around for a long time and are traditional have been utilized extensively in voltage and current control loops [6 7]. Despite being utilized extensively, the controllers are prone to disturbances and parameter changes. Consequently, they perform poorly in dynamic situations [9-11].

Beginning in the most recent few years, improved intelligent control approaches, specifically artificial neural networks (ANNs) and fuzzy logic controllers (FLC), have been proposed as potential alternatives to competitive power electronic systems [12–14]. Compared to traditional controllers, artificial neural networks (ANNs) can execute nonlinear mapping and adaptive learning, which makes it possible to

ATU- AJIEA, Volume:1, Issue: 2, 12, 30, 2025, © 2025 AJIEA, All Rights Reserved

represent complicated dynamic behaviours and achieve favourable performance while dealing with uncertainties [15], [16]. Several applications have been reported to improve the steady-state accuracy and dynamic behaviour of PFC converters [17], [18]. These works do not reach close to the unity power factor and do not employ the ANN for the controller's outer and inner loops.

In order to guarantee a regulated DC output voltage, this work suggests an ANN-based control technique for a power factor-corrected three-phase diode bridge rectifier, which is then followed by a boost converter. The control structure comprises two artificial neural network controllers, with the outer-loop ANN responsible for controlling the output voltage and determining the voltage of the reference current. The inner-loop ANN also shapes the inductor current to a synchronized sinusoidal reference. The phase of the input voltage is obtained with the assistance of a phase-locked loop (PLL), and as a result, the waveform of the measured current is wholly aligned with the voltage of the grid when the power factor is equal to one Despite several ANN-based PFC controllers reported in the literature [12–18], most focus either on optimizing the current-loop control or improving steady-state voltage regulation. Few studies have explored a coordinated dual-loop ANN approach capable of maintaining near-unity power factor while simultaneously regulating the DC-link voltage under rapid load changes. The present work addresses this gap by employing two ANN controllers , one in the outer voltage loop and one in the inner current loop combined with a phase-locked loop (PLL) for precise current synchronization. This structure enhances dynamic performance and robustness against parameter uncertainties, which distinguishes it from earlier ANN-based PFC techniques.

Following the introduction, the remainder of the paper is divided into five pieces, with the first portion serving as the introduction. The second section shows the modelling the three-phase diode bridge rectifier incorporating a boost converter. Within Section 3, the proposed control approach that is based on ANNs is explained in greater detail. The simulation findings and their arguments are presented in the following part, part 4. The paper's conclusion is found in Section 5, which discusses the primary findings.

2. Modelling of the Three-Phase Active PFC Circuit

The system design includes a three-phase AC supply, a diode bridge rectifier, and a DC-DC boost converter, as depicted in Figure 1. The goal is to implement power factor correction (PFC) and a constant DC output voltage using artificial neural network (ANN) based controllers. The mathematical representation of the system can be roughly divided into two sections: the rectifier subsystem and the boost converter subsystem. The main expressions for the balance system with pure sinusoidal can be expressed as [19], [20].

$$v_{sa}(t) = V_m \sin(\omega t) \tag{1}$$

$$v_{sb}(t) = V_m \sin\left(\omega t - \frac{2\pi}{3}\right) \tag{2}$$

$$v_{sc}(t) = V_m \sin\left(\omega t + \frac{2\pi}{3}\right) \tag{3}$$

After including the filter of the input side, the main equation can be rewritten as

$$v_{sa}(t) = R_s i_{sa}(t) + L_s \frac{di_{sa}(t)}{dt} + V_{bridge}(t) \tag{4}$$

where $v_{sa}(t)$ denotes the source voltage, $i_{sa}(t)$ represents the input current, R_s and L_s are the line resistance and inductance and V_{bridge} indicate the voltage at the rectifier output terminal. The diode bridge turns these AC voltages into a pulsating DC voltage V_{bridge}, represented approximately by the maximum line-to-line voltage at every instant. At the DC link, the average value of the rectified voltage is:

ATU- AJIEA, Volume:1, Issue: 2, 12, 30, 2025, © 2025 AJIEA, All Rights Reserved

Al Furat Journal of Innovations in Engineering Applications (AJIEA)
ISSN - 3105-3149

$$V_{bridge} = \frac{3\sqrt{3}}{\pi} V_{LL,peak} \tag{5}$$

Regarding the boost converter modelling during the ON switch by KVL law, the main expressions can be represented as

$$\frac{di_L}{dt} = \frac{v_s}{L} \tag{6}$$

$$\frac{dv_o}{dt} = -\frac{v_o}{R_L C_o} \tag{7}$$

And then, during the OFF switch, the final expressions are

$$\frac{di_L}{dt} = \frac{v_s - v_o}{L} \tag{8}$$

$$\frac{dv_o}{dt} = \frac{i_L - \frac{v_o}{R_L}}{C_o} \tag{9}$$

Finally, using the state space averaging method for one cycle D, the final equation for ON and OFF are presented in expressions (10 and 11), respectively.

$$\frac{di_L}{dt} = v_s - D v_o \tag{10}$$

$$C_o \frac{dv_o}{dt} = (1 - D) i_L - \frac{v_o}{R_L} \tag{11}$$

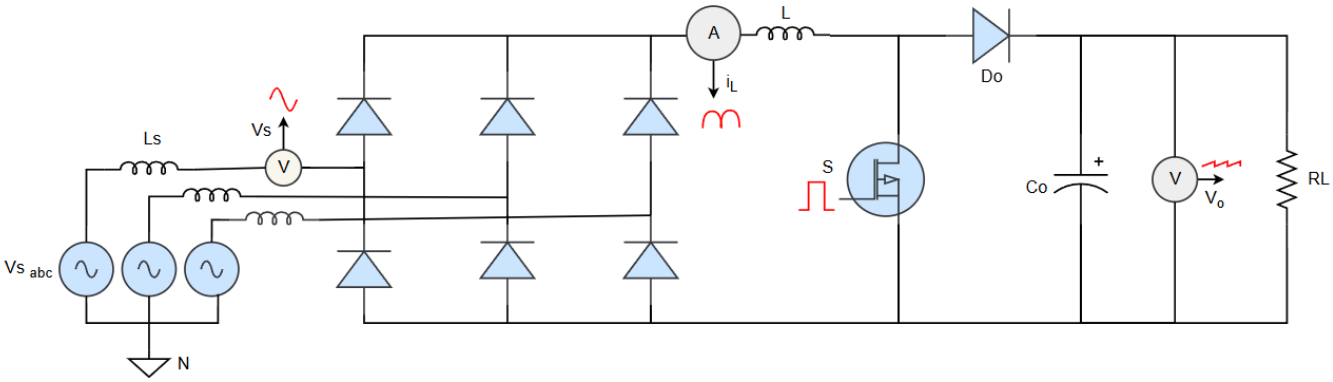

(a)

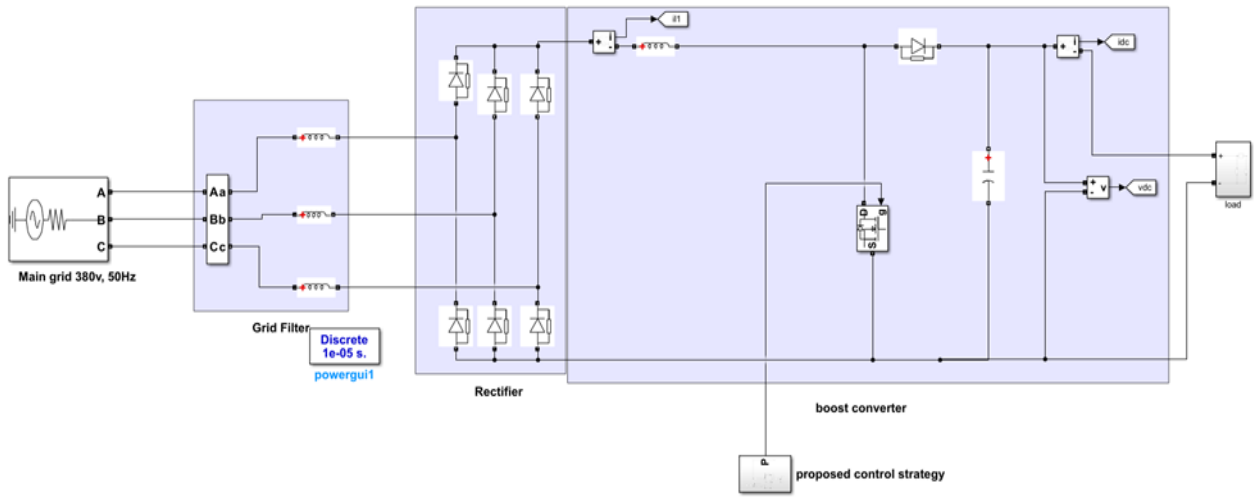

ATU- AJIEA, Volume:1, Issue: 2, 12, 30, 2025, © 2025 AJIEA, All Rights Reserved

Al Furat Journal of Innovations in Engineering Applications (AJIEA)
ISSN - 3105-3149

(b)

Figure 1. Schematic of active power factor correction based on DC-DC converter(a) Schematic, and (b) Simulink model.

3. Proposed Control Strategy

Figure 2 shows the control scheme for a PFC-based DC-DC boost converter using ANN controllers in voltage and current loops. The phase angle obtained from the input voltage V_s a phase-locked loop (PLL) is extracted to create a synced sine waveform, which is rectified as the reference for modulating the input current. In the outer voltage control loop, the output voltage V_o is compared with a reference V_{ref}, and the ANN controller processes the output error to obtain reference current amplitude $Iderf$. This is combined with a sinusoidal template to create a current reference in phase with the input voltage and, thus, the unity power factor. The actual inductor's current i_L is compared with the reference, and the error goes to another ANN controller for giving the suitable duty cycle D for the PWM block to command the boost converter switching. Dynamic performance and power quality are enhanced using this dual-loop ANN-based approach.

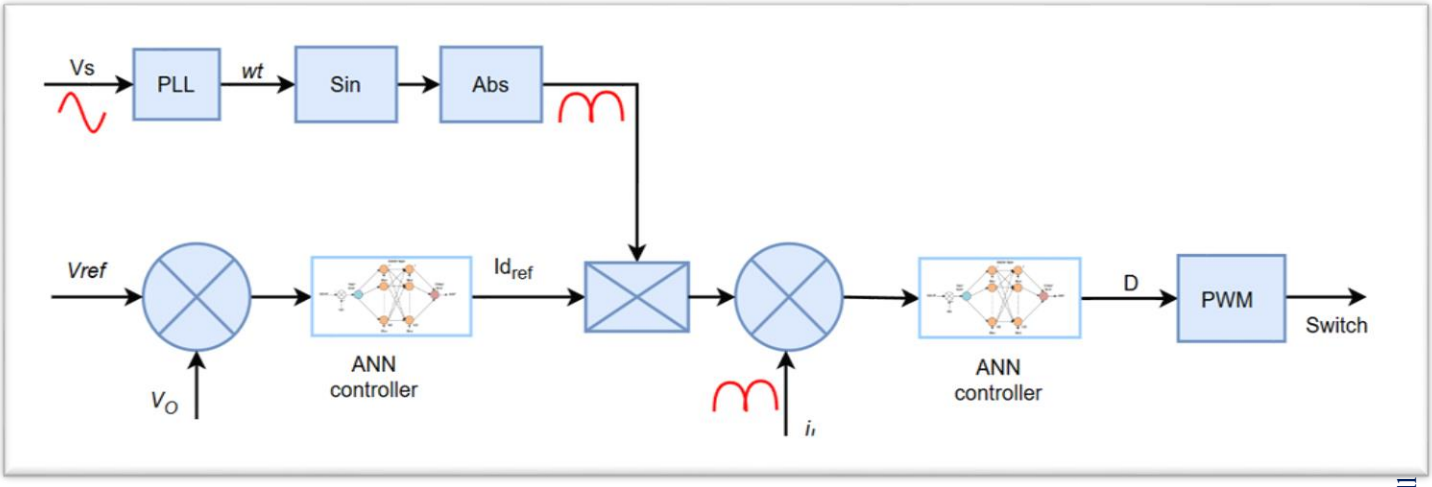

(a)

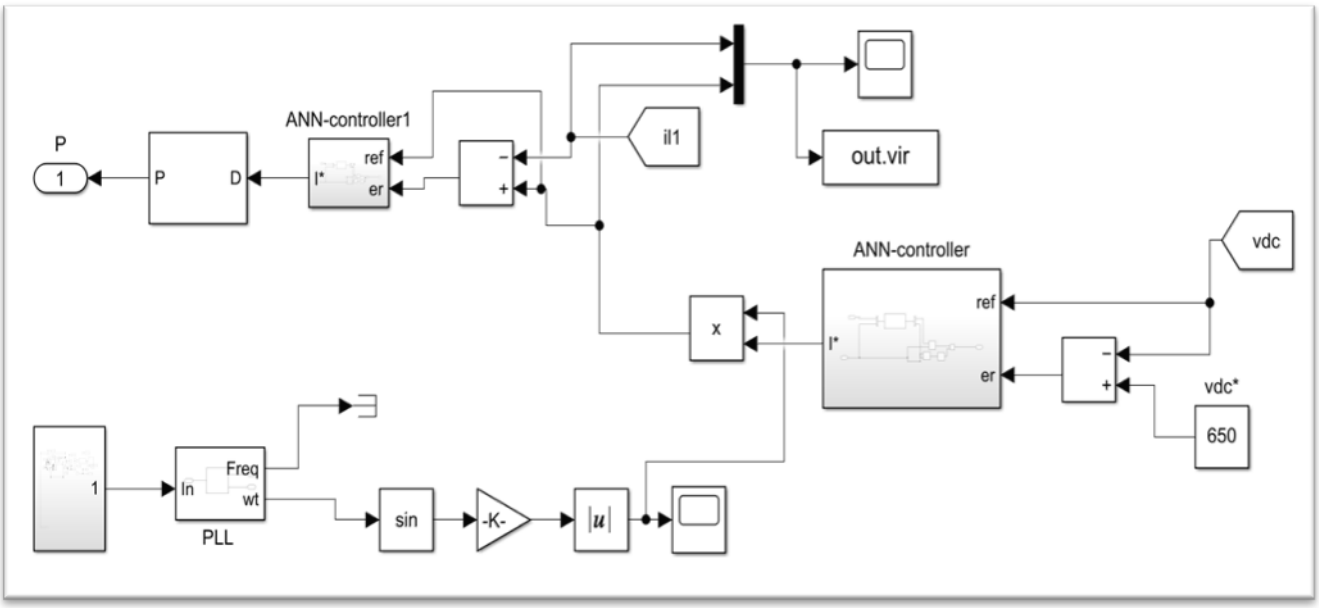

(b)

Figure 2 Proposed control strategy for PFC-based DC-DC boost converter (a) Schematic, and (b) Simulink model.

3.1. The ANN Proposed Controller

This ANN controller architecture is delineated, elucidating the external voltage loop and internal current loop with respect to reference signals.

An ANN approach employs an outer loop as a voltage controller to regulate the output voltage of Vo to a constant value of V_{ref} and for the inner loop as a current regulator when comparing the output outer loop with the inductor current measurement. Figure 3 shows that Two hidden layers are used, with 100 neurons in each layer. X_{ref} denotes voltage reference or current reference, and the Xo is represented by actual voltage or actual inductor current, and u is the output of the ANN controller for both loops. It can observed from Figure 3that the predicted output from the ANN controller is used as the output layer. The ANN current controller is trained to control the current component iL to their reference value, Id_{ref}.

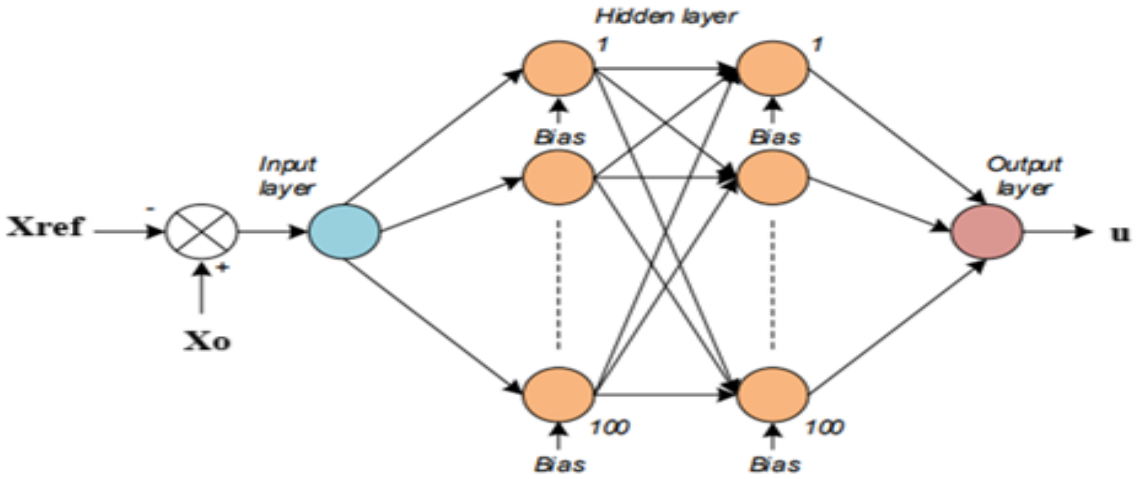

Figure 3. The proposed controller for DC-link voltage based on the ANN approach.

3.2. Proposed System Objective

The primary objective of the proposed control strategy in this paper is to attain a unity power factor and to reach free of harmonic in the input side under dynamic load. This is done to achieve a pure sinusoidal waveform devoid of harmonics, and it can be expressed mathematically as

$$v_{sa}(t) = V_m \sin(\omega t) \tag{12}$$

with V_m is the peak amplitude voltage, and ω is the angular frequency of the grid.

The second objective of the proposed control is to achieve a THD close to zero, and this objective can be expressed as

$$THD_i \cong 0 \tag{13}$$

In order to investigate these two objectives, the ANN-based controller is for outer and inner loop controllers.

4. Simulation Results and Discussions

This section details the simulation of the proposed control utilizing artificial neural networks (ANN) for power factor correction and the reduction of total harmonic distortion (THD) on the input side for voltage and current, implemented in Matlab/Simulink. The relevant parameters are listed in Table 1. The simulation results presented in Figures 4 to 8 demonstrate the effectiveness of the ANN-based control scheme in achieving power factor correction (PFC) for the active boost converter and bridge diode

ATU- AJIEA, Volume:1, Issue: 2, 12, 30, 2025, © 2025 AJIEA, All Rights Reserved

rectifier. Figure 4 illustrates the waveforms of the phase input voltage and current, indicating that the input current approximates a sinusoidal form and is nearly in phase with the voltage. This indicates that the operating power factor is near unity, as shown in Figure 5, with a value of 0.995. Figure 5 demonstrates that the DC link voltages of the boost converter remain stable under dynamic load conditions, exhibiting minimal ripple. The figure illustrates that the total DC link voltage rapidly recovers from the transient effects of a load increase, stabilizing at approximately 650 V following the initial start-up. This takes place soon after the initial start-up. Figure 7 illustrates the efficient control of a rapid load power change from approximately 27 kW to 45 kW within 1.5 seconds, without compromising system stability. To demonstrate the validity of the proposed control schematic in tracking references and ensuring the system draws current in a sinusoidal waveform, Figure 8 presents the current reference generated by the outer loop alongside the actual inductor current, including a zoomed section of the waveform. The results indicate that the ANN controller effectively delivers stable voltage regulation, closely resembling a pure sinusoidal waveform with minimal harmonic distortion, thereby fulfilling the two objectives specified in expressions 12 and 13.

Table 1. Specifications of the proposed system.

Description	Value
Maximum power	45 kW
Grid side phase voltage	220V
DC-link voltage	650V
Grid frequency	50Hz
Switching frequency	100 kHz
Filtering inductor	0.4 mH
Resistance of inductor	0.04Ω
Inductor of boost converter	10 mH
Capacitor of boost converter	15 µF

ATU- AJIEA, Volume:1, Issue: 2, 12, 30, 2025, © 2025 AJIEA, All Rights Reserved

Al Furat Journal of Innovations in Engineering Applications (AJIEA)
ISSN - 3105-3149

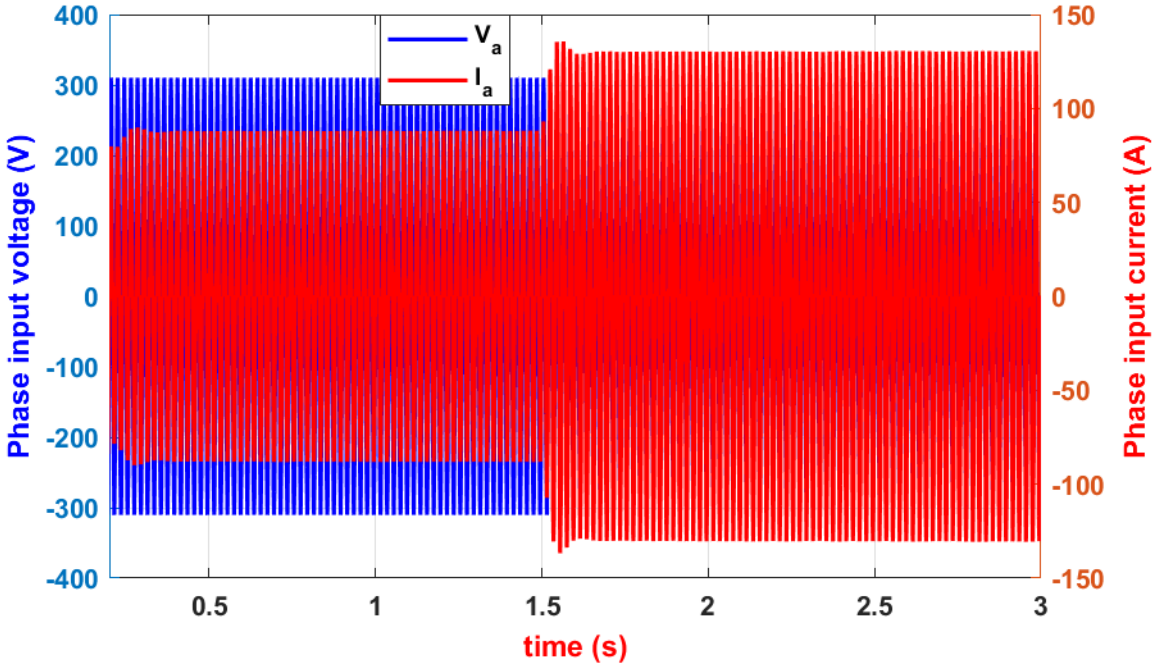

(a)

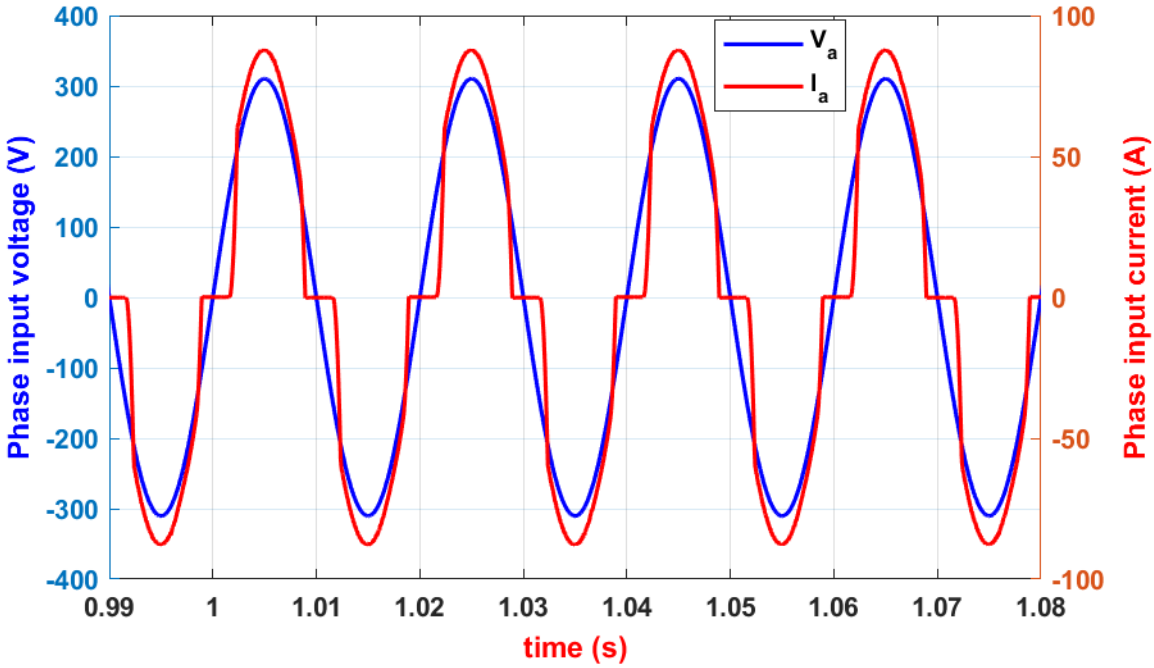

(b)

Figure 4. (a) Phase waveforms of input voltage and current on the grid side and (b) zoomed section.

ATU- AJIEA, Volume:1, Issue: 2, 12, 30, 2025, © 2025 AJIEA, All Rights Reserved

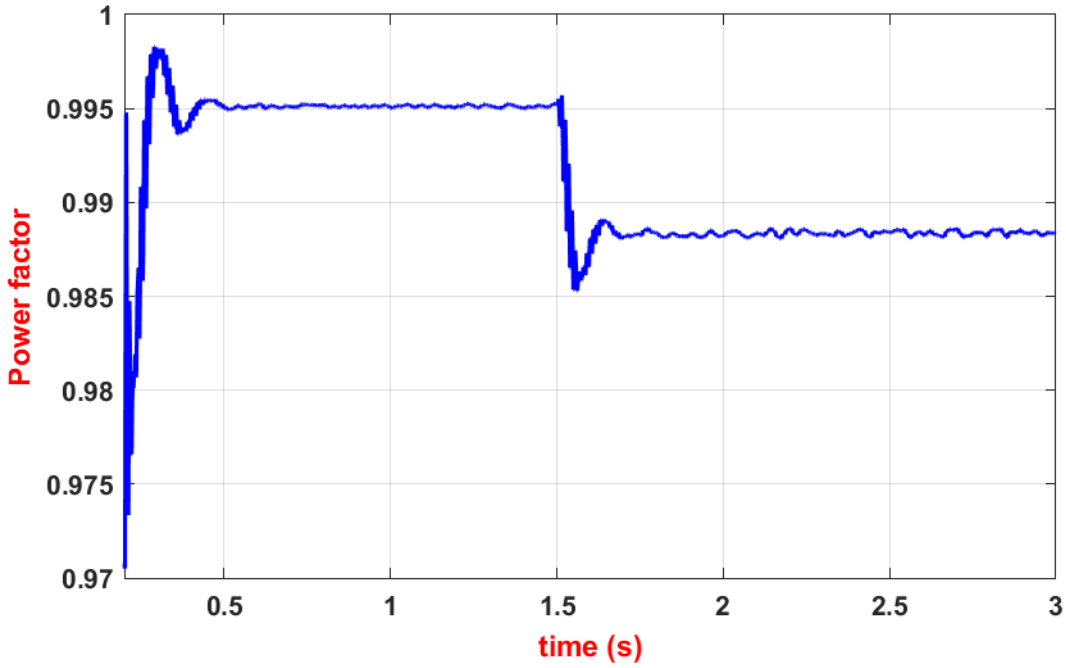

Figure 5. The power factor for each phase of the input side.

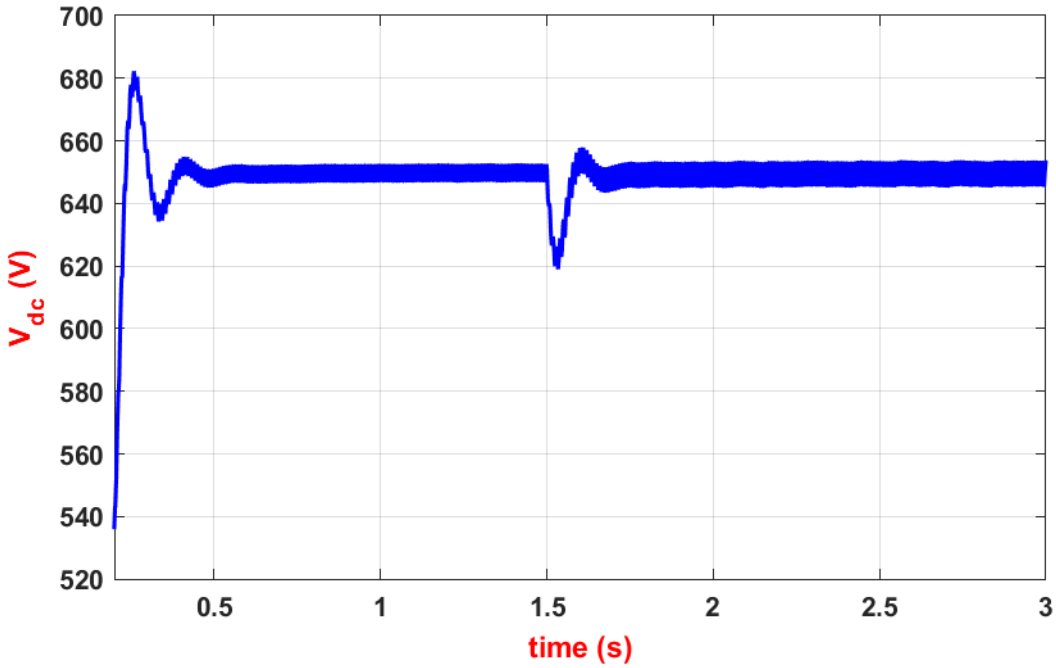

Figure 6. Total DC link voltage response.

ATU- AJIEA, Volume:1, Issue: 2, 12, 30, 2025, © 2025 AJIEA, All Rights Reserved

Al Furat Journal of Innovations in Engineering Applications (AJIEA)
ISSN - 3105-3149

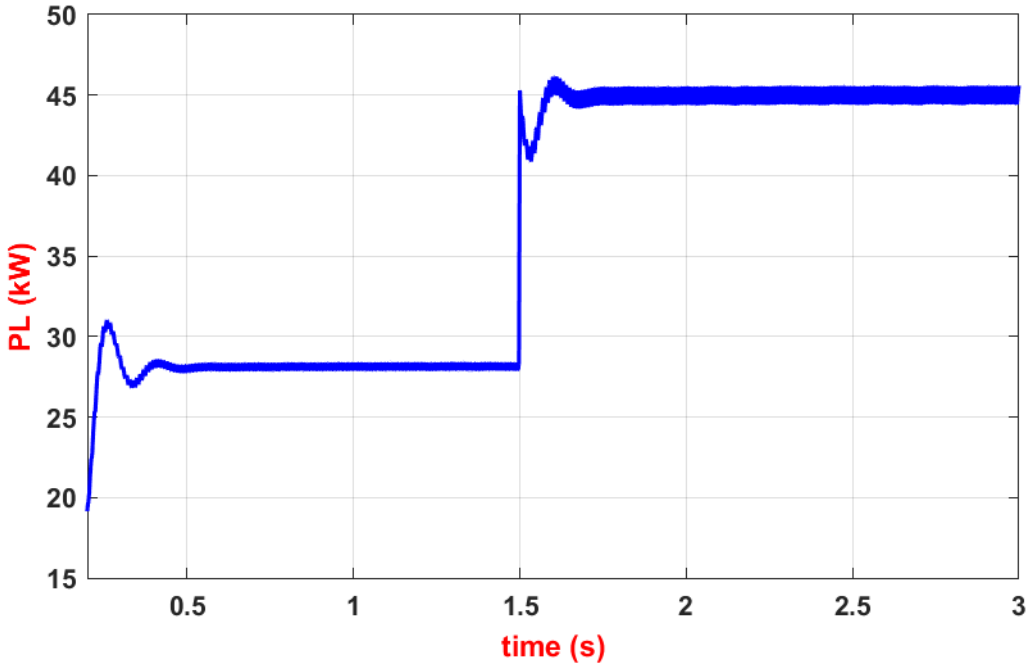

Figure 7. Load power response.

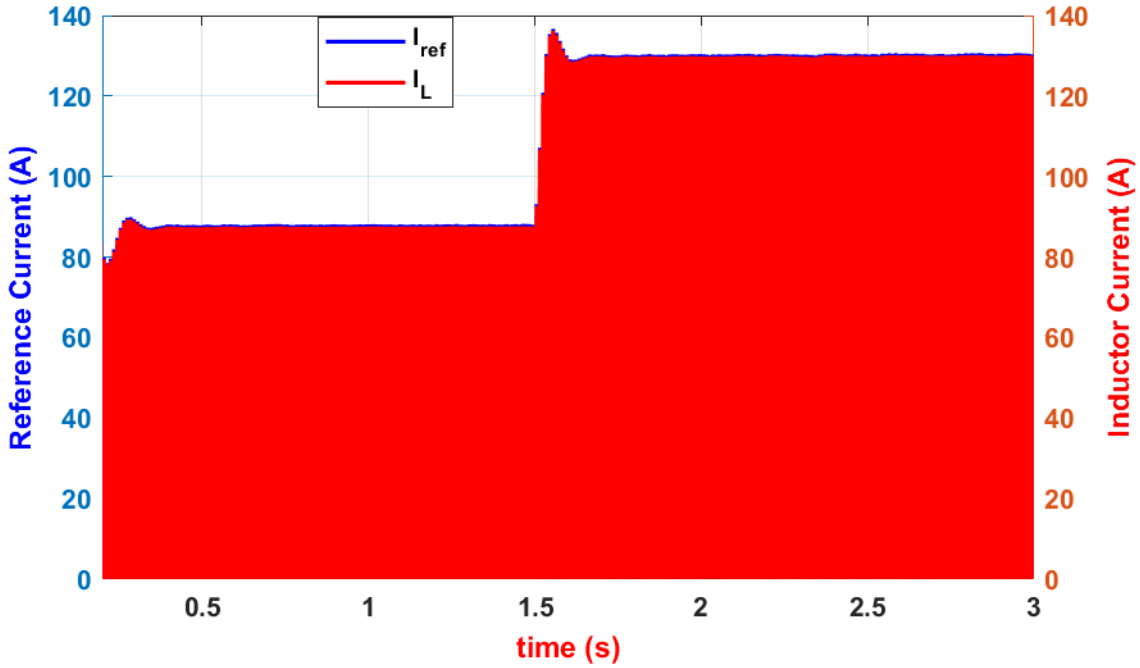

(a)

ATU- AJIEA, Volume:1, Issue: 2, 12, 30, 2025, © 2025 AJIEA, All Rights Reserved

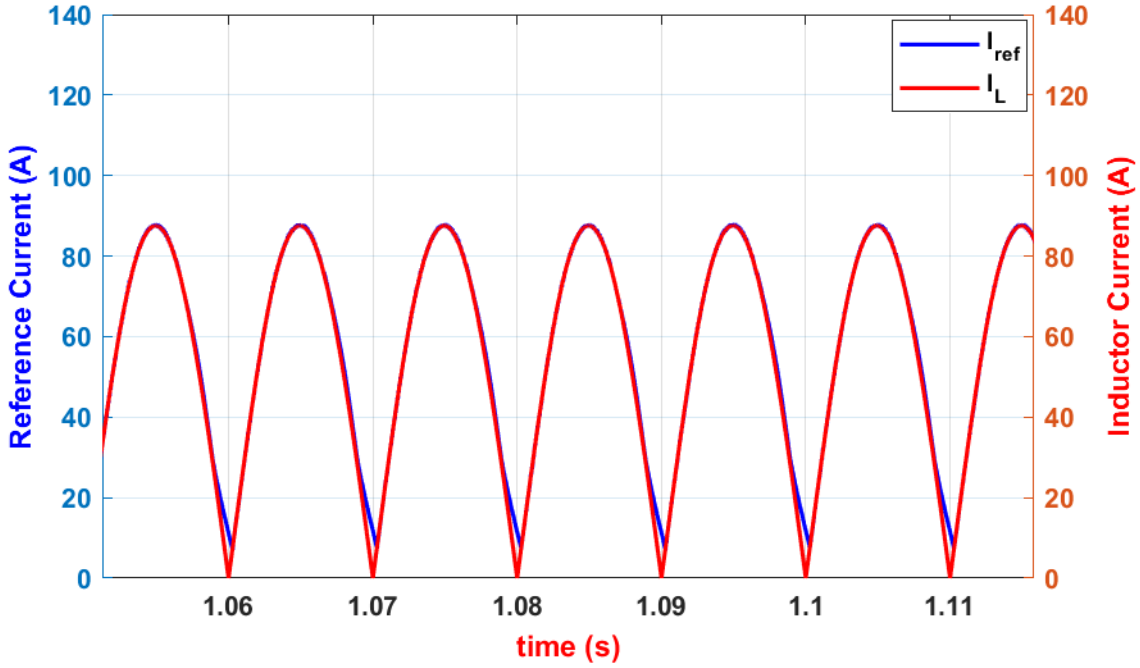

(b)

Figure 8. (a) Reference current and inductor actual current response based ANN controller and (b) zoomed section.

4.1. Comparative Analysis with PI-Based Controller

A comparative evaluation was carried out against a conventional PI-based controller under identical operating conditions. The PI controller was carefully tuned to achieve its optimum dynamic response to ensure a fair basis for comparison. The simulation results demonstrate that the ANN controller delivered faster transient recovery during load variations and achieved more stable voltage regulation . These findings highlight the superior capability of the ANN controller in enhancing both steady-state performance and dynamic response.

ATU- AJIEA, Volume:1, Issue: 2, 12, 30, 2025, © 2025 AJIEA, All Rights Reserved

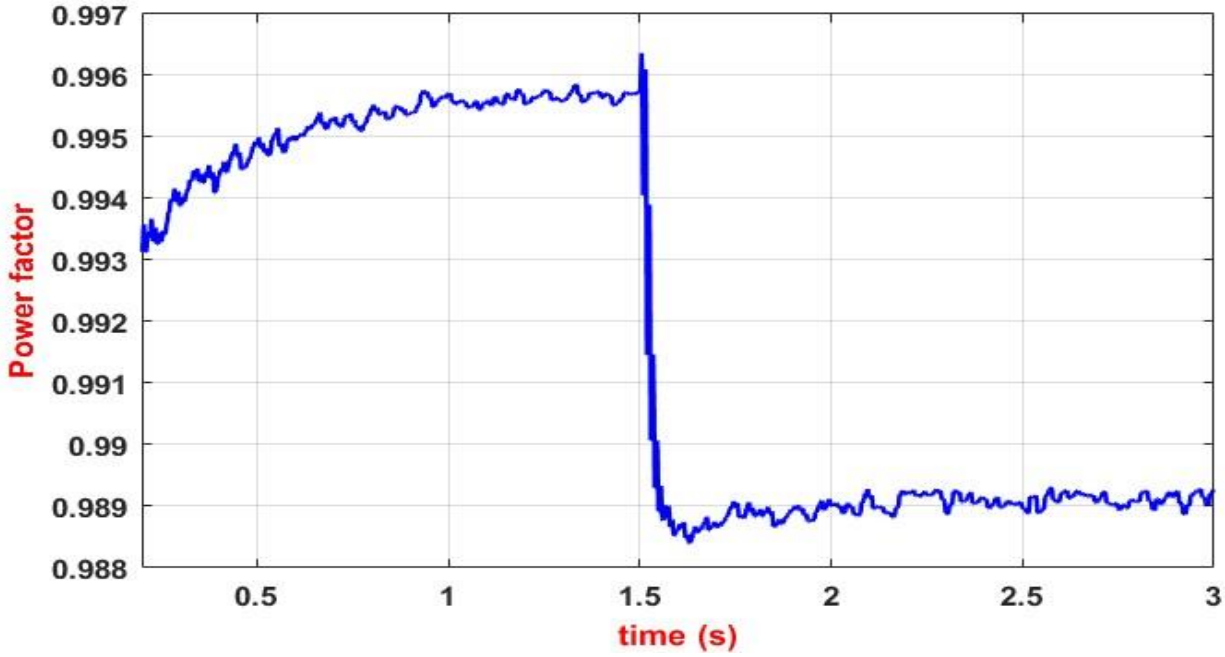

Figure 9. The power factor for each phase of the input side under PI-based control obtained from the Simulink simulation results.

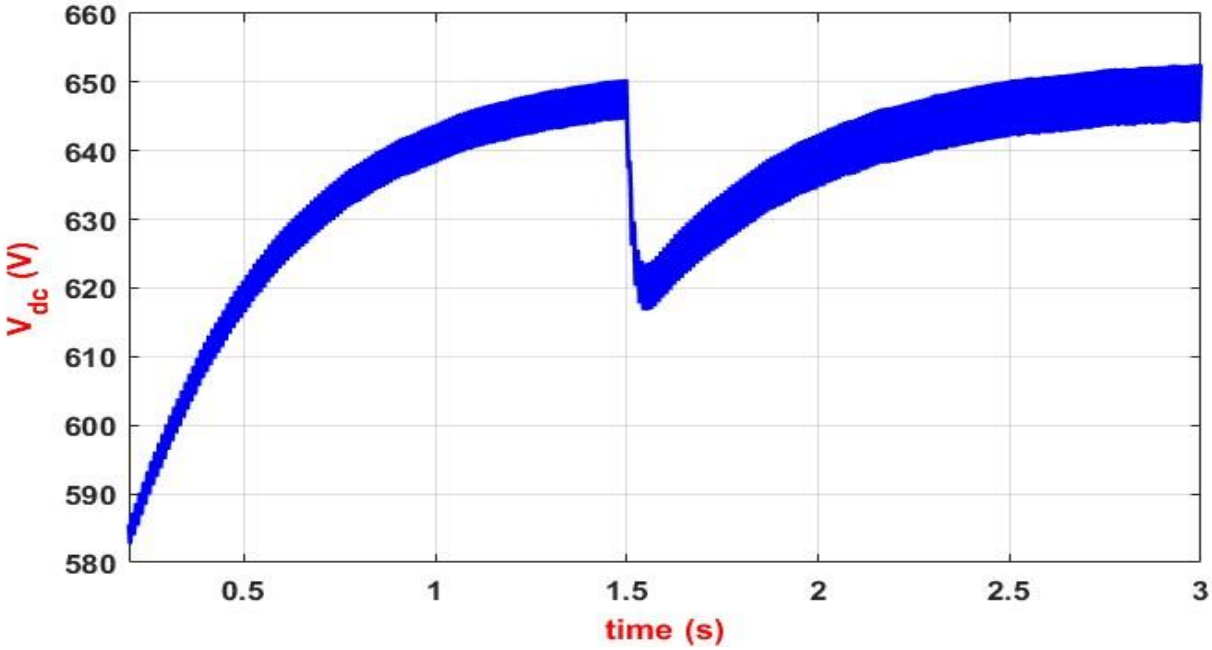

Figure 10. Total DC-link voltage response of the system obtained from the Simulink simulation under PI-based control.

ATU- AJIEA, Volume:1, Issue: 2, 12, 30, 2025, © 2025 AJIEA, All Rights Reserved

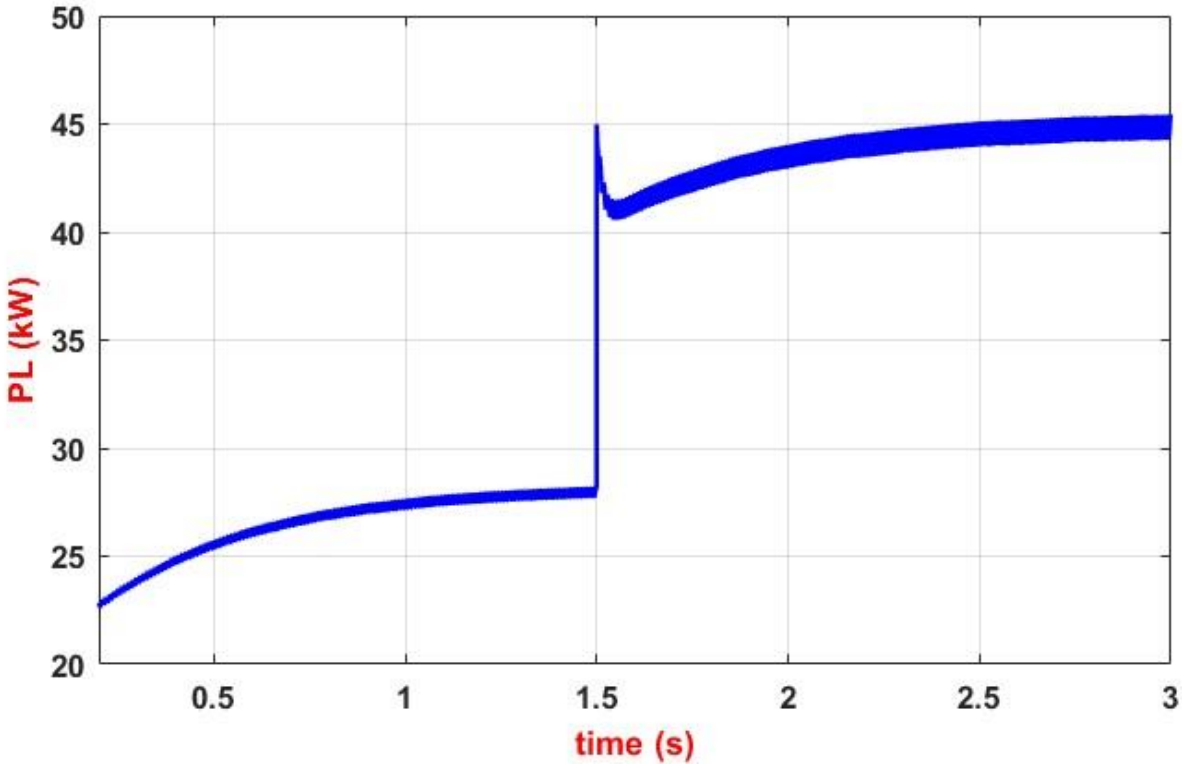

Figure 11. Load power response of the system obtained from the Simulink simulation under PI-based control.

5. Conclusion

This paper has presented an intelligent dual-loop control strategy based on artificial neural networks (ANNs) to achieve simultaneous power factor correction (PFC) and output-voltage regulation of a three-phase diode-bridge rectifier–boost-converter system. The outer-loop ANN controller regulates the DC-link voltage, whereas the inner-loop ANN controller shapes the input current to remain in phase with the AC supply. A comprehensive mathematical model was developed to capture the nonlinearities and dynamic operating conditions, and the ANN approach was shown to handle these challenges effectively.

Comparative simulations conducted under identical conditions demonstrate that the proposed ANN-based controller achieved a higher power factor (0.995) and lower total harmonic distortion (THD = 1.7 %) than the conventional PI-based controller, while providing faster transient recovery and improved voltage regulation. These results confirm the superior adaptability and robustness of the ANN approach, validating its advantage over classical control techniques.
The findings not only meet international power-quality standards but also establish a foundation for deploying ANN-based controllers in renewable-energy systems, industrial motor drives, and other high-performance power-conversion applications.

References

[1] Gonçalves, José Teixeira, Stanimir Valtchev, Rui Melicio, Alcides Gonçalves, and Frede Blaabjerg. "Hybrid three-phase rectifiers with active power factor correction: A systematic review." *Electronics* 10, no. 13 (2021): 1520.
[2] Saravana, Prakash P., R. Kalpana, and Bhim Singh. "Three-phase three-level boost-type front-end PFC rectifier for improving power quality at input AC mains of telecom loads." *Journal of Power Electronics* 18, no. 6 (2018): 1819-1829.

ATU- AJIEA, Volume:1, Issue: 2, 12, 30, 2025, © 2025 AJIEA, All Rights Reserved

[3] Soeiro, Thiago Batista, and Pavol Bauer. "Three-phase unidirectional quasi-single-stage delta-switch rectifier+ dc-dc buck converter." In *IECON 2019-45th Annual Conference of the IEEE Industrial Electronics Society*, vol. 1, pp. 3479-3484. IEEE, 2019.

[4] Krishna, S. Arya, and Lizy Abraham. "Boost converter based power factor correction for single phase rectifier using fuzzy logic control." In *2014 first international conference on computational systems and communications (ICCSC)*, pp. 122-126. IEEE, 2014.

[5] Mallik, Ayan, Bryan Faulkner, and Alireza Khaligh. "Control of a single-stage three-phase boost power factor correction rectifier." In *2016 IEEE Applied Power Electronics Conference and Exposition (APEC)*, pp. 54-59. IEEE, 2016.

[6] Balestero, Juan Paulo Robles, Fernando Lessa Tofoli, Rodolfo Castanho Fernandes, Grover Victor Torrico-Bascope, and Falcondes José Mendes de Seixas. "Power factor correction boost converter based on the three-state switching cell." *IEEE Transactions on Industrial Electronics* 59, no. 3 (2011): 1565-1577.

[7] Mather, Barry A., and Dragan Maksimović. "A simple digital power-factor correction rectifier controller." *IEEE transactions on power electronics* 26, no. 1 (2010): 9-19.

[8] Li, Y. "Design of CCM boost converter using fractional-order PID and self-tuning schemes for power factor correction." International Journal on Interactive Design and Manufacturing (IJIDeM) 19, no. 4 (2025): 2671-2682.

[9] Cetin, Sevilay. "Power-factor-corrected and fully soft-switched PWM boost converter." *IEEE Transactions on Industry Applications* 54, no. 4 (2018): 3508-3517.

[10] Franco de Souza, Alencar, Enio Roberto Ribeiro, Eduardo Moreira Vicente, and Fernando Lessa Tofoli. "Experimental evaluation of active power factor correction techniques in a single-phase AC-DC boost converter." *International Journal of Circuit Theory and Applications* 47, no. 9 (2019): 1529-1553.

[11] Mahmud, Khizir, and Lei Tao. "Power factor correction by PFC boost topology using average current control method." In *2013 IEEE Global High Tech Congress on Electronics*, pp. 16-20. IEEE, 2013.

[12] Attia, Hussain. "Artificial neural network based unity power factor corrector for single phase DC-DC converters." *International Journal of Electrical and Computer Engineering* 10, no. 4 (2020): 4145.

[13] Bayindir, R. A. M. A. Z. A. N., S. Sagiroglu, and I. Colak. "An intelligent power factor corrector for power system using artificial neural networks." *Electric Power Systems Research* 79, no. 1 (2009): 152-160.

[14] Liu, Wanci, Yapeng Liu, and Aibing Wang. "Design of CCM boost converter using fractional-order PID and neural-network techniques for power factor correction." *Journal of Engineering and Applied Science* 71, no. 1 (2024): 227.

[15] Periyasamy, K. "Power factor correction based on Fuzzy Logic controller with average current-mode for DC-DC boost converter." *Elektronika ir Elektrotechnika* 2, no. 2 (2012): 67-72.

[16] Demirtaş, Metin, and Farhan Ahmad. "Fractional fuzzy PI controller using particle swarm optimization to improve power factor by boost converter." *An International Journal of Optimization and Control: Theories & Applications (IJOCTA)* (2023).

[17] Kamalapathi, Kuditi, Neeraj Priyadarshi, Sanjeevikumar Padmanaban, Jens Bo Holm-Nielsen, Farooque Azam, Chandrahasan Umayal, and Vigna K. Ramachandaramurthy. "A hybrid moth-flame fuzzy logic controller based integrated cuk converter fed brushless DC motor for power factor correction." *Electronics* 7, no. 11 (2018): 288.

[18] Babes, Badreddine, Samia Latrèche, Amar Bouafassa, Oualid Aissa, Abd Essalam Badoud, Mabrouk Khemliche, Mohit Bajaj, and Ievgen Zaitsev. "A dSPACE-based implementation of ANFIS and predictive current control for a single phase boost power factor corrector." *Scientific Reports* 14, no. 1 (2024): 12775.

[19] Kim, Katherine A., and Thomas G. Wilson. "Simulation Technique and Mathematical Basis for Faster AC Analysis of Power Factor Correction Boost Converters." *IEEE Access* (2024).

[20] Fusic, Julius, M. Shunmathi, R. Sitharthan, Gnana Swathika OV, H. Ramesh, and Ashok Kumar. "Efficient power factor correction in single phase AC–DC boost converter for retrofitted electric bicycle battery charging: A finite element analysis approach." *Computers and Electrical Engineering* 119 (2024): 109549.

ATU- AJIEA, Volume:1, Issue: 2, 12, 30, 2025, © 2025 AJIEA, All Rights Reserved